FusionServer 1288H V7 Server

Technical White Paper

Issue	03
Date	2023-11-30

xFusion Digital Technologies Co., Ltd.

Copyright © xFusion Digital Technologies Co., Ltd. 2023. All rights reserved.

No part of this document may be reproduced or transmitted in any form or by any means without prior written consent of xFusion Digital Technologies Co., Ltd.

Trademarks and Permissions

xFUSION and other xFusion trademarks are trademarks of xFusion Digital Technologies Co., Ltd. All other trademarks and trade names mentioned in this document are the property of their respective holders.

Notice

In this document, "xFusion" is used to refer to "xFusion Digital Technologies Co., Ltd." for concise description and easy understanding, which does not mean that "xFusion" may have any other meaning. Any "xFusion" mentioned or described hereof may not be understood as any meaning other than "xFusion Digital Technologies Co., Ltd.", and xFusion Digital Technologies Co., Ltd. shall not bear any liability resulting from the use of "xFusion".

The purchased products, services and features are stipulated by the contract made between xFusion and the customer. All or part of the products, services and features described in this document may not be within the purchase scope or the usage scope. Unless otherwise specified in the contract, all statements, information, and recommendations in this document are provided "AS IS" without warranties, guarantees or representations of any kind, either express or implied.

The information in this document is subject to change without notice. Every effort has been made in the preparation of this document to ensure accuracy of the contents, but all statements, information, and recommendations in this document do not constitute a warranty of any kind, express or implied.

xFusion Digital Technologies Co., Ltd.

Address: 9th Floor, Building 1, Zensun Boya Square, Longzihu Wisdom Island
Zhengdong New District 450046
Zhengzhou, Henan Province
People's Republic of China

Website: https://www.xfusion.com

About This Document

Purpose

This document describes the appearance, features, performance parameters, and hardware and software compatibility of FusionServer 1288H V7, so that users can have an in-depth and detailed understanding of FusionServer 1288H V7.

Intended Audience

This document is intended for pre-sales engineers.

Symbolic Conventions

The symbols that may be found in this document are defined as follows:

Symbol	Description
DANGER	Indicates a hazard with a high level of risk which, if not avoided, could result in death or serious injury.
WARNING	Indicates a hazard with a medium risk which, if not avoided, could result in death or serious injury.
CAUTION	Indicates a low-level hazard which, if not avoided, could result in minor or moderate injury.
NOTICE	Indicates a potentially hazardous situation which, if not avoided, could result in device damage, data loss, device performance degradation, or other unpredictable results. NOTICE is used to address practices not related to personal injury.
NOTE	Supplements the important information in the main text. NOTE is used to address information not related to personal injury, equipment damage, and environment deterioration.

 Copyright © xFusion Digital Technologies Co., Ltd.

Change History

Issue	Release Date	Change Description
03	2023-11-30	Updated: **5.5.1.4 10 x 2.5" Drive NVMe Configuration** Added: **11 Waste Product Recycling**
02	2023-05-30	Added: ● **5.5.1.3 10 x 2.5" Drive Pass-Through Configuration** ● **5.5.1.4 10 x 2.5" Drive NVMe Configuration**
01	2023-02-22	This issue is the first official release.

 Copyright © xFusion Digital Technologies Co., Ltd.

Contents

About This Document.....ii

1 Overview.....1

2 Product Features.....2

3 Physical Structure.....5

4 Logic Structure.....7

5 Hardware Description.....9

5.1 Front Panel.....9
5.1.1 Appearance.....9
5.1.2 Indicators and Buttons.....10
5.1.3 Ports.....14
5.2 Rear Panel.....16
5.2.1 Appearance.....17
5.2.2 Indicators and Buttons.....17
5.2.3 Ports.....19
5.3 Processors.....20
5.4 Memory.....21
5.4.1 DDR5 Memory.....21
5.4.1.1 Memory Identifier.....21
5.4.1.2 Memory Subsystem Architecture.....23
5.4.1.3 Memory Compatibility.....24
5.4.1.4 DIMM Installation Rules.....25
5.4.1.5 Positions of the Memory Modules.....26
5.4.1.6 Memory Protection Technologies.....29
5.5 Storage.....29
5.5.1 Drive Configuration and Drive Numbering.....29
5.5.1.1 4 x 3.5" Drive Pass-Through Configuration.....29
5.5.1.2 8 x 2.5" Drive Pass-Through Configuration.....31
5.5.1.3 10 x 2.5" Drive Pass-Through Configuration.....33
5.5.1.4 10 x 2.5" Drive NVMe Configuration.....37
5.5.2 Drive Indicators.....38
5.5.3 RAID Controller Card.....40

 Copyright © xFusion Digital Technologies Co., Ltd.

5.6 Network....40
5.6.1 OCP 3.0 NICs....40
5.7 I/O Expansion....40
5.7.1 PCIe Card....40
5.7.2 PCIe Slots....41
5.7.3 PCIe Slot Description....42
5.8 PSUs....44
5.9 Fan Module....44
5.10 Board....45
5.10.1 Mainboard....46
5.10.2 Drive Backplane....48
5.10.3 Fan Board....51
6 Specifications....53
6.1 Technical Specifications....53
6.2 Environmental Specifications....57
6.3 Physical Specifications....59
7 Software and Hardware Compatibility....61
8 Safety Instructions....62
8.1 Security....62
8.2 Maintenance and Warranty....65
9 System Management....67
10 Certifications....69
11 Waste Product Recycling....71
A Appendix....72
A.1 Chassis Label Information....72
A.1.1 Chassis Head Label....72
A.1.1.1 Nameplate....73
A.1.1.2 Certificate....74
A.1.1.3 Quick Access Label....75
A.1.2 Chassis Internal Label....76
A.1.3 Chassis Tail Label....77
A.2 Product SN....77
A.3 Operating Temperature Limitations....80
A.4 Nameplate....85
A.5 RAS Features....85
A.6 Sensor List....85
B Glossary....92
B.1 A-E....92
B.2 F-J....93

 Copyright © xFusion Digital Technologies Co., Ltd.

B.3 K-O....93
B.4 P-T....93
B.5 U-Z....94
C Acronyms and Abbreviations.... 95
C.1 A-E....95
C.2 F-J....96
C.3 K-O....97
C.4 P-T....98
C.5 U-Z....100

1 Overview

FusionServer 1288H V7 (1288H V7) is a new-generation 1U 2-socket rack server designed for the Internet, Internet Data Center (IDC), cloud computing, enterprise business, and telecom.

The 1288H V7 server is ideal for IT core services, cloud computing, virtualization, high-performance computing, distributed storage, big data processing, enterprise or telecom applications, and other complex workloads.

The 1288H V7 features low power consumption, high scalability, high reliability, and easy management and deployment.

NOTE

For details about the 1288H V 7 nameplate, see **A.4 Nameplate**.

Figure 1-1 1288H V7 with 8 x 2.5" drives (example)

 Copyright © xFusion Digital Technologies Co., Ltd.

2 Product Features

Performance

- The server supports the new generation of Intel® Xeon® Scalable processors (Sapphire Rapids). A processor provides up to 60 cores and 120 threads, up to 350 W TDP, a maximum of 4.2 GHz turbo frequency, 2 MB L2 cache and 1.875 MB L3 cache, and four groups of 16 GT/s UPI links between the processors, which deliver supreme processing performance.
- The server supports a maximum of 32 DDR5 4800 MT/s registered dual-inline memory modules (RDIMMs), delivering up to 8192 GB total memory capacity (calculated using the maximum capacity of a single memory module: 256 GB). The memory modules feature high speed and availability.

Scalability

- Flexible drive configurations cater to a variety of business requirements and ensure high elasticity and scalability of storage resources.
- Up to 4 x 3.5" or 10 x 2.5" front drives + 2 x 2.5" rear drives.
- A maximum of 10 x 2.5" NVMe U.2 drives, improving storage density and I/O performance.
- The server supports a maximum of three standard PCIe x16 slots, one of which supports PCIe 5.0.
- Supports two GE/10GE/25GE/100GE OCP 3.0 NICs with bandwidth scalable to PCIe 4.0 x 16 and orderly hot swap.

  NOTE

  A hot swap of an OCP NIC requires support of related OS drivers. Ensure that the OS is started and the OCP hot swap-related drivers have been loaded before performing a hot swap of an OCP NIC.

Availability and Serviceability

- Carrier-class components with process expertise ensure high system reliability and availability.
- The server uses hot-swappable SAS/SATA drives. SAS/SATA drives support RAID 0, 1, 1E, 10, 5, 50, 6, and 60, depending on the RAID controller card used. It also uses a supercapacitor to protect the RAID cache data against power failures.

 Copyright © xFusion Digital Technologies Co., Ltd.

- The panel provides a UID/Healthy LED indicator and a fault diagnosis LED. The iBMC Web management interface provides key component status. The iBMC web management interface helps technical personnel quickly find faulty components or the components with risk of faults, simplifying maintenance, speeding up troubleshooting, and improving system availability.
- The panel provides the iBMC direct connect management port to support local iBMC O&M, improving O&M efficiency.
- A server provides two hot-swappable PSUs in 1+1 redundancy mode and eight hot-swappable fan modules in N+1 redundancy mode, improving system availability.
- The onboard Intelligent Baseboard Management Controller (iBMC) can continuously monitor system parameters, trigger alarms, and take recovery measures to minimize shutdown.
- For information about the warranty in the Chinese market, see **Warranty**.

Manageability and Security

- The built-in iBMC monitors server operating status and provides remote management.
- Supports BIOS menu passwords to ensure the security of system startup and system management.
- Supports the Network Controller Sideband Interface (NC-SI) feature that allows a network port to provide functions of both a management network port and a service network port. The NC-SI feature can be enabled or disabled through the iBMC or BIOS. The NC-SI feature is disabled by default.

  NOTE

  The service network port of the NC-SI feature supports the following configurations:

  - It can be bound to any network port of the server's OCP 3.0 NIC or other standard PCIe NICs that support the NC-SI function.
  - It allows users to enable or disable the virtual local area network ID (VLAN ID) and configure the VLAN ID. The VLAN ID is **0** and disabled by default.
  - It supports IPv4 and IPv6 addresses, and allows users to configure the IP address, subnet mask, default gateway, or prefix length of an IPv6 address.
- The integrated Unified Extensible Firmware Interface (UEFI) improves setup, configuration, and update efficiency and simplifies fault clearance.
- Supports the lockable server front bezel to ensure local data security.
- Supports chassis cover opening detection to enhance physical security.
- Intel Execute Disable Bit (EDB) function prevents certain types of malicious buffer overflow attacks when working with a supported OS.
- Intel® Trusted Execution Technology defends against malicious software attacks based on hardware, prevents the firmware on the device from being maliciously modified, and prevents unauthorized boot block execution.
- Intel® Software Guard Extensions (SGX) technology allows applications to run in their own independent space without being affected by other software running in the system, thereby enhancing security.
- Supports secure boot based on the chip-level Root of Trust (RoT) and provides the level-by-level verification function starting from the hardware trusted root, building a complete secure boot chain.

 Copyright © xFusion Digital Technologies Co., Ltd.

- Supports the trusted platform module (TPM) and trusted password module (TCM) to provide advanced encryption functions, such as digital signature and remote authentication.
- Meets the following requirements in NIST SP 800-147B:
  - The BIOS firmware digital signature update mechanism is supported. During the upgrade, the digital signature is verified to prevent unauthorized BIOS firmware upgrade.
  - The flash security protection mechanism is supported to prevent unauthorized modification of the flash in the OS.

Energy Efficiency

- Provides 80 Plus Platinum/Titanium PSUs with different energy efficiency levels. The efficiency of the PSUs reaches 96% when the load is 50%.
- Supports active/standby power supply and high-voltage DC power supply to improve the efficiency of the power supply system.
- Efficient Voltage Regulator Down (VRD) power supplies for boards minimize the energy loss from DC/DC power conversion.
- Area-based Proportional-Integral-Derivative (PID) intelligent fan speed adjustment and intelligent CPU frequency scaling optimize heat dissipation and reduce overall system power consumption.
- The improved thermal design with energy-efficient fans ensures optimal heat dissipation and reduces system power consumption.
- The server is protected with power capping and power control measures.
- Staggered spinup of drives reduces the server boot power consumption.

 Copyright © xFusion Digital Technologies Co., Ltd.

3 Physical Structure

Figure 3-1 Physical structure of a server with 8 x 2.5" drives (example)

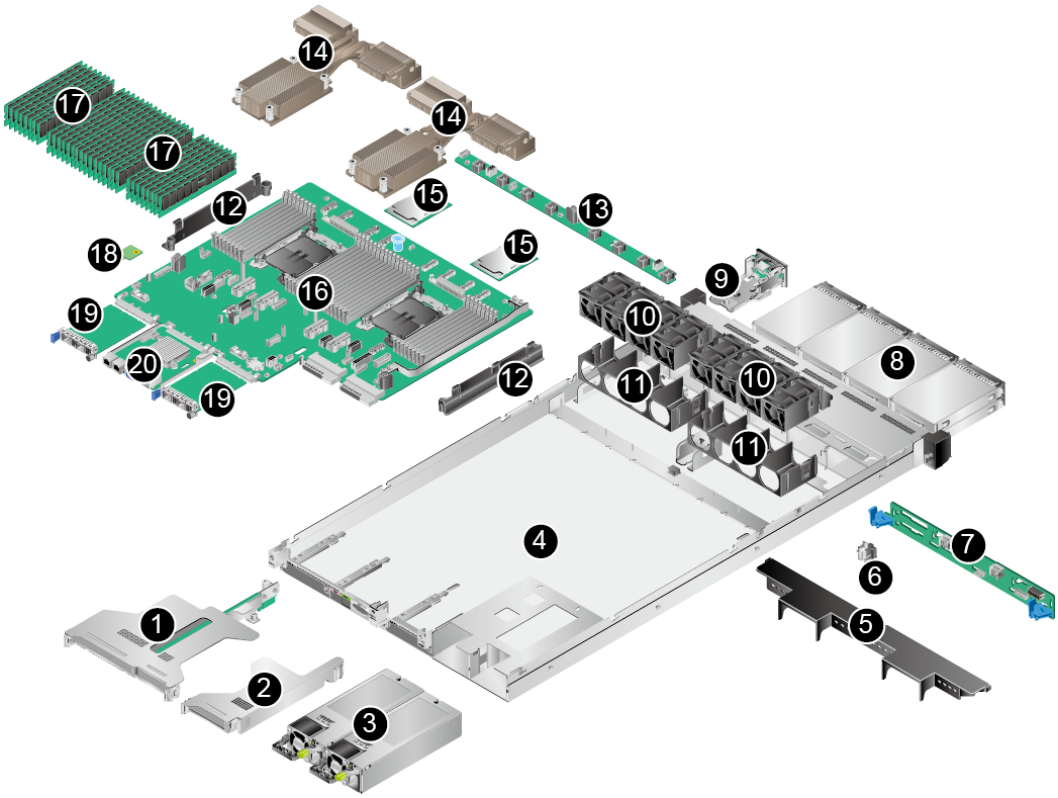

1	I/O module 1	2	I/O module 2
3	PSU	4	Chassis
5	Air duct	6	Intrusion sensor
7	Front-drive backplane	8	Front drives
9	Indicator board module	10	Fan modules
11	Fan module bracket	12	Cable management arm

 Copyright © xFusion Digital Technologies Co., Ltd.

13	Fan board	14	Processor heat sinks
15	Processors	16	Mainboard
17	Memory modules	18	TPM/TCM
19	OCP 3.0 NICs	20	BMC card

 Copyright © xFusion Digital Technologies Co., Ltd.

4 Logic Structure

Figure 4-1 Logic structure

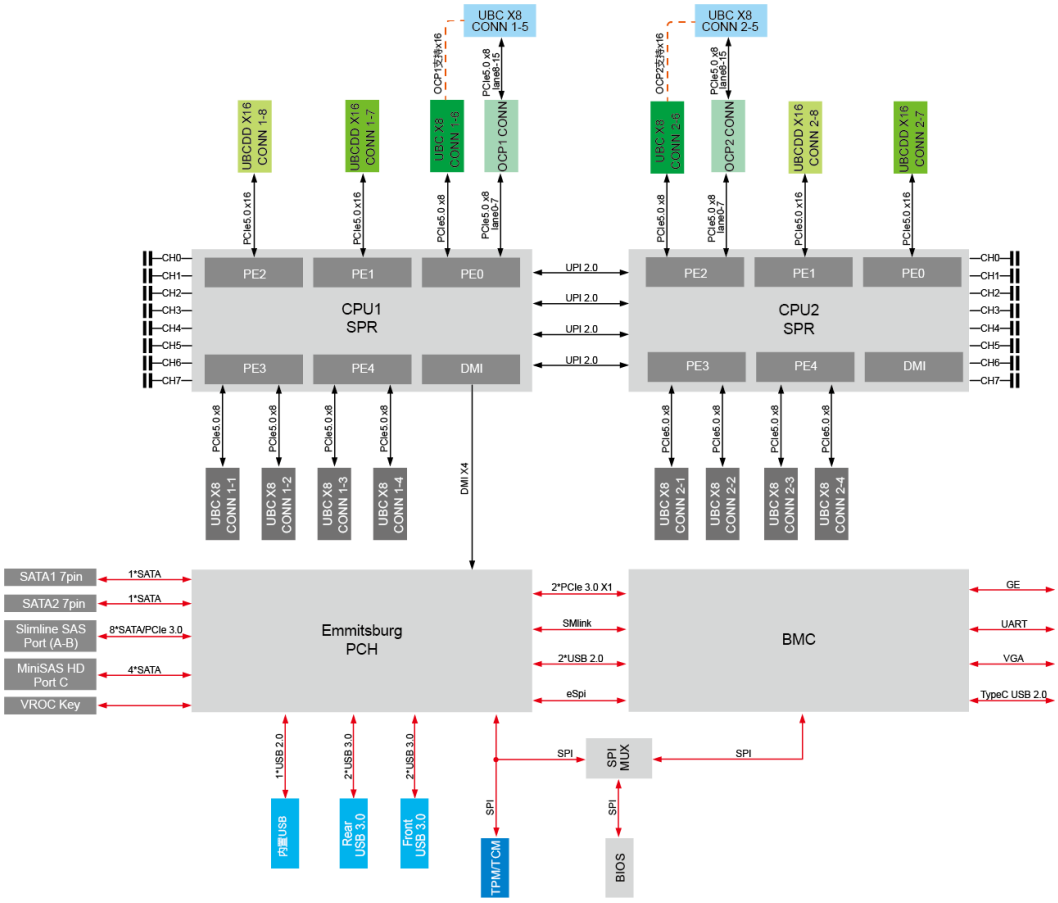

- The server supports one or two new-generation Intel® Xeon® Scalable processors (Sapphire Rapids). It supports 32 DDR5 DIMMs. The processors interconnect with each other through four UltraPath Interconnect (UPI) links at a speed of up to 16 GT/s.
- The PCIe bus resources of the processor are connected to the PCIe riser card through PCBs or cables. Different PCIe riser cards support PCIe slots of different specifications. CPU 1 and CPU 2 each support one OCP 3.0 NIC. The PCIe slot bandwidth is scalable to x16.

 Copyright © xFusion Digital Technologies Co., Ltd.

- The BMC management chip integrated on the mainboard supports ports such as a video graphic array (VGA) port, a management network port, and a serial port.

 Copyright © xFusion Digital Technologies Co., Ltd.

5 Hardware Description

5.1 Front Panel
5.2 Rear Panel
5.3 Processors
5.4 Memory
5.5 Storage
5.6 Network
5.7 I/O Expansion
5.8 PSUs
5.9 Fan Module
5.10 Board

5.1 Front Panel

5.1.1 Appearance

- 4 x 3.5" drive configuration

Figure 5-1 Front view

1	Drive	2	Slide-out label plate (with an SN label)

 Copyright © xFusion Digital Technologies Co., Ltd.

- 8 x 2.5" drive configuration

Figure 5-2 Front view

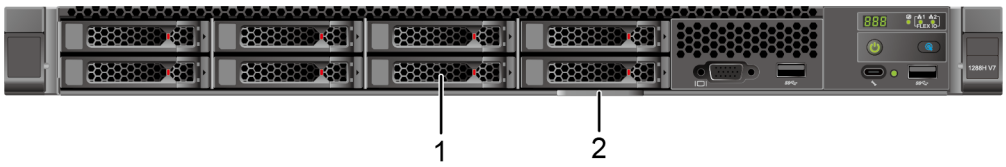

1	Drive	2	Slide-out label plate (with an SN label)

- 10 x 2.5" drive configuration

Figure 5-3 Front view

1	Drive	2	Slide-out label plate (with an SN label)

5.1.2 Indicators and Buttons

Indicator and Button Positions

- 4 x 3.5" drive configuration

Figure 5-4 Indicators and buttons on the front panel

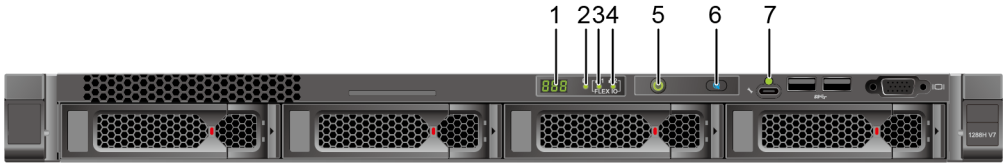

1	Fault diagnosis LED	2	Health status indicator
3	FlexIO card 1 presence indicator	4	FlexIO card 2 presence indicator
5	Power button/indicator	6	UID button/indicator

 Copyright © xFusion Digital Technologies Co., Ltd.

7	iBMC direct connect management port indicator	-	-

- 8 x 2.5" drive configuration

Figure 5-5 Indicators and buttons on the front panel

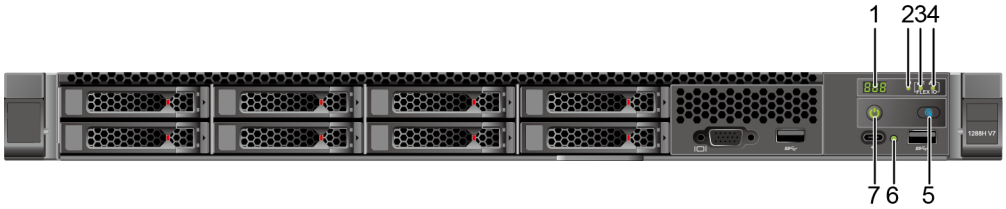

1	Fault diagnosis LED	2	Health status indicator
3	FlexIO card 1 presence indicator	4	FlexIO card 2 presence indicator
5	UID button/indicator	6	iBMC direct connect management port indicator
7	Power button/indicator	-	-

- 10 x 2.5" drive configuration

Figure 5-6 Indicators and buttons on the front panel

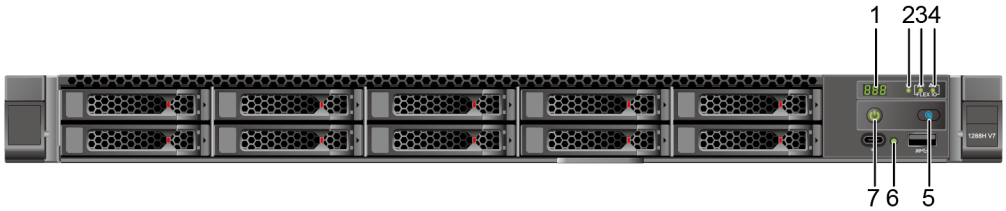

1	Fault diagnosis LED	2	Health status indicator
3	FlexIO card 1 presence indicator	4	FlexIO card 2 presence indicator
5	UID button/indicator	6	iBMC direct connect management port indicator
7	Power button/indicator	-	-

 Copyright © xFusion Digital Technologies Co., Ltd.

Indicator and Button Descriptions

Table 5-1 Description of indicators and buttons on the front panel

Sign	Indicator and Button	Description
888	Fault diagnosis LED	• ---: The device is operating properly. • Error code: A component is faulty. For details about the error codes, see the ***FusionServer Server iBMC Alarm Handling***.
	Health status indicator	• Off: The device is powered off or faulty. • Blinking red at 1 Hz: A major alarm has been generated on the system. • Blinking red at 5 Hz: A critical alarm has been generated on the system. • Steady green: The device is operating properly.
	FlexIO card presence indicator	Indicates whether the FlexIO card is detected. • Off: The FlexIO card is not detected. • Blinking green at 0.5 Hz: The FlexIO card is detected but is not powered on. • Blinking green at 2 Hz: The FlexIO card is detected and has just been inserted. • Steady green: The FlexIO card is detected and the power supply is normal.

 Copyright © xFusion Digital Technologies Co., Ltd.

Sign	Indicator and Button	Description
⏻	Power button/ indicator	Power indicator: ● Off: The device is powered off. ● Steady green: The device is powered on. ● Blinking yellow: The iBMC is starting. The power button is locked and cannot be pressed. The iBMC is started in about 1 minute, and then the power indicator is steady yellow. ● Steady yellow: The device is in the standby state. Power button: ● When the device is powered on, you can press this button to gracefully shut down the OS. **NOTE** For different OSs, you may need to shut down the OS as prompted. ● When the device is powered on, you can hold down this button for 6 seconds to forcibly power off the device. ● When the power indicator is steady yellow, you can press this button to power on the device.
	UID button/ indicator	The UID button/indicator helps identify and locate a device. UID indicator: ● Off: The device is not being located. ● Blinking or steady blue: The device is being located. UID button: ● You can control the UID indicator status by pressing the UID button or using the iBMC. ● You can press this button to turn on or off the UID indicator. ● You can press and hold down this button for 4 to 6 seconds to reset the iBMC.

 Copyright © xFusion Digital Technologies Co., Ltd.

Sign	Indicator and Button	Description
	iBMC direct connect management port indicator	Indicates the status when the iBMC direct connect management port connects to a terminal (local PC): ● Off: No terminal is connected. ● Blinking green at short intervals for 3 seconds and then off: The port is disabled. ● Steady green: The terminal is connected. Indicates the status when the iBMC direct connect management port connects to a USB device: ● Blinking red at long intervals: The job fails or an error is reported when the job is complete. ● Blinking green at short intervals: The job is being executed. ● Blinking green at short intervals for 3 seconds and then off: The port is disabled. ● Steady green: The server configuration file is being copied from the USB device or the job is successfully completed.

5.1.3 Ports

Port Positions

- 4 x 3.5" drive configuration

Figure 5-7 Ports on the front panel

1	iBMC direct connect management port	2	USB 3.0 port
3	USB 3.0 port	4	VGA port

- 8 x 2.5" drive configuration

 Copyright © xFusion Digital Technologies Co., Ltd.

Figure 5-8 Ports on the front panel

1	VGA port	2	USB 3.0 port
3	iBMC direct connect management port	4	USB 3.0 port

- 10 x 2.5" drive configuration

Figure 5-9 Ports on the front panel

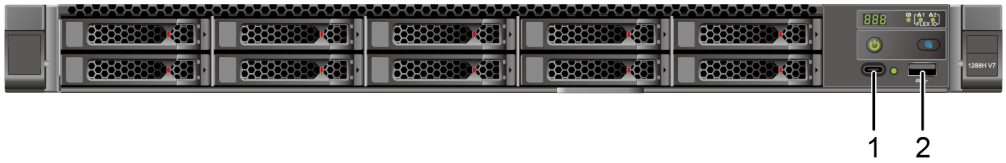

1	iBMC direct connect management port	2	USB 3.0 port

Port Description

Table 5-2 Ports on the front panel

Name	Type	Quantity[Note]	Description
VGA port	DB15	1	Used to connect a display terminal, such as a monitor or KVM.

 Copyright © xFusion Digital Technologies Co., Ltd.

Name	Type	Quantity[Note]	Description
iBMC direct connect management port	USB Type-C **NOTE** The USB 2.0 protocol is supported.	1	Used to connect to a local PC using a USB Type-C cable to monitor and manage the system. **NOTE** Only local PCs running Windows 10 are supported. ● To log in to the iBMC from a local PC, enter **https:///***IP address of the iBMC management network port* in the address box of the browser on the local PC. Used to connect to a USB device. **NOTICE** ● Before connecting an external USB device, ensure that the USB device functions properly; otherwise, it may adversely impact the server. ● For details about how to connect a USB device to the iBMC direct connect management port, see the ***FusionServer Rack Server iBMC User Guide***.
USB port	USB 3.0	2	Used to connect to a USB 3.0 device. **NOTICE** ● Before connecting an external USB device, ensure that the USB device functions properly; otherwise, it may adversely impact the server. ● The USB 3.0 port can be used to supply power to low-power peripherals. However, the USB 3.0 port must comply with the USB specifications. To run advanced peripherals, such as external CD/DVD drives, an external power supply is required.
Note: The number of ports varies depending on server configuration. This table lists the maximum number of ports in different configurations.			

5.2 Rear Panel

 Copyright © xFusion Digital Technologies Co., Ltd.

5.2.1 Appearance

Figure 5-10 Rear view

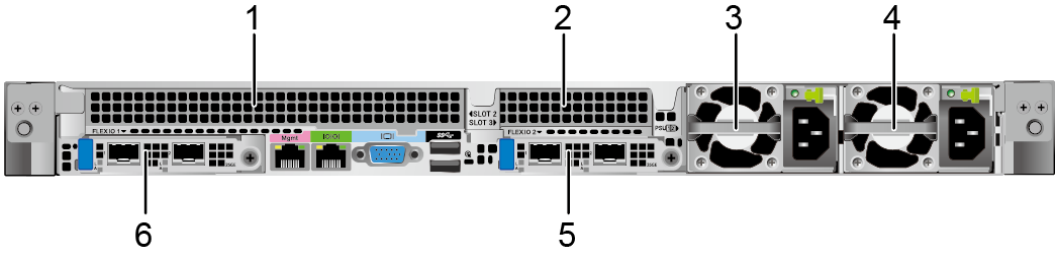

1	I/O module 1	2	I/O module 2
3	PSU 1	4	PSU 2
5	(Optional) FlexIO card 2 **NOTE** The FlexIO card slot supports only OCP 3.0 NICs.	6	(Optional) FlexIO card 1 **NOTE** The FlexIO card slot supports only OCP 3.0 NICs.

NOTE

- I/O module 1 supports a PCIe riser module or rear drive module.
- I/O module 2 supports only the PCIe riser module.
- For details about the OCP 3.0 NIC, see **5.6.1 OCP 3.0 NICs**.
- The figure is for reference only. The actual configuration may vary.

5.2.2 Indicators and Buttons

Indicator Positions

Figure 5-11 Indicators on the rear panel

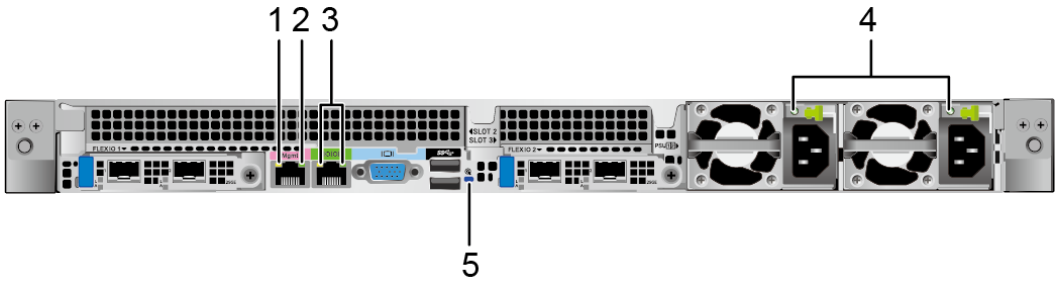

1	Data transmission status indicator of the management network port	2	Connection status indicator of the management network port

3	Serial port indicator **NOTE** Reserved and unavailable currently.	4	PSU indicator
5	UID Indicator	-	-

Indicator Description

Table 5-3 Description of indicators on the rear panel

Sign	Indicator	Description
-	Data transmission status indicator of the management network port	● Off: No data is being transmitted. ● Blinking yellow: Data is being transmitted.
-	Connection status indicator of the management network port	● Off: The network is not connected. ● Steady green: The network port is properly connected.
-	PSU indicator	● Off: No power is supplied. ● Blinking green at 1 Hz: – The input is normal, and the server is in the standby state. – The input is overvoltage or undervoltage. – The PSU is in deep hibernation mode. ● Blinking green at 4 Hz: The firmware is being upgraded online. ● Steady green: The input and output are normal. ● Steady orange: The input is normal but there is no output. **NOTE** The possible causes of no output are as follows: ● Power supply overtemperature protection ● Power output overcurrent or short-circuit ● Output overvoltage ● Short-circuit protection ● Device failure (excluding failure of all devices)

 Copyright © xFusion Digital Technologies Co., Ltd.

Sign	Indicator	Description
	UID Indicator	The UID indicator helps identify and locate a device. ● Off: The device is not being located. ● Blinking or steady blue: The device is being located. **NOTE** You can control the UID indicator status by pressing the UID button or using the iBMC.

5.2.3 Ports

Port Positions

Figure 5-12 Ports on the rear panel

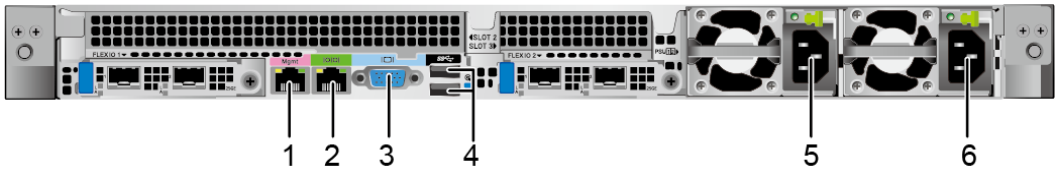

1	Management network port	2	Serial port
3	VGA port	4	USB 3.0 port
5	Socket for PSU 1	6	Socket for PSU 2

Port Description

Table 5-4 Ports on the rear panel

Name	Type	Quantity	Description
Management network port	RJ45	1	iBMC management network port, which is used to manage the server. **NOTE** The management network port is a GE port that supports 100 Mbit/s and 1000 Mbit/s auto-negotiation.

 Copyright © xFusion Digital Technologies Co., Ltd.

Name	Type	Quantity	Description
Serial port	RJ45	1	A port used for debugging. By default, it serves as the OS serial port. You can also set it as the iBMC serial port on the iBMC CLI. **NOTE** The port is a 3-wire serial communication port, and its default baud rate is 115,200 bit/s.
VGA port	DB15	1	Used to connect a display terminal, such as a monitor or KVM.
USB port	USB 3.0	2	Used to connect to a USB 3.0 device. **NOTICE** ● The maximum current is 1.3 A for an external USB device. ● Before connecting an external USB device, ensure that the USB device functions properly; otherwise, it may adversely impact the server. ● The USB 3.0 port can be used to supply power to low-power peripherals. However, the USB 3.0 port must comply with the USB specifications. To run advanced peripherals, such as external CD/DVD drives, an external power supply is required.
PSU socket	-	2	Used to connect to a power distribution unit (PDU) through a power cable. You can select the PSUs as required. **NOTE** When determining the PSUs, ensure that the rated power of the PSUs is greater than that of the server.

5.3 Processors

- The server supports one or two processors.
- If only one processor is required, install it in socket CPU 1.
- Processors of the same model must be used in a server.

 Copyright © xFusion Digital Technologies Co., Ltd.

- For details about the optional components, consult the local sales representative or see "OS and Parts Compatibility" in the **Compatibility Checker**.

Figure 5-13 Positions of the processors

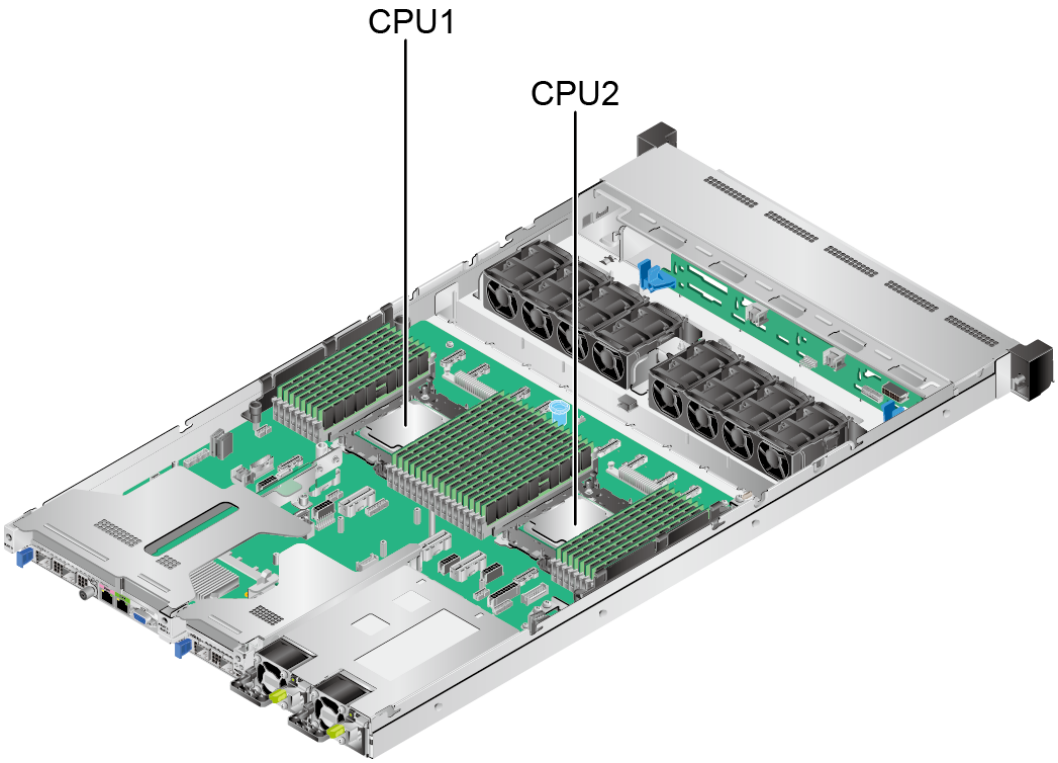

5.4 Memory

5.4.1 DDR5 Memory

5.4.1.1 Memory Identifier

You can determine the memory module properties based on the label attached to the memory module.

 Copyright © xFusion Digital Technologies Co., Ltd.

Figure 5-14 Memory identifier

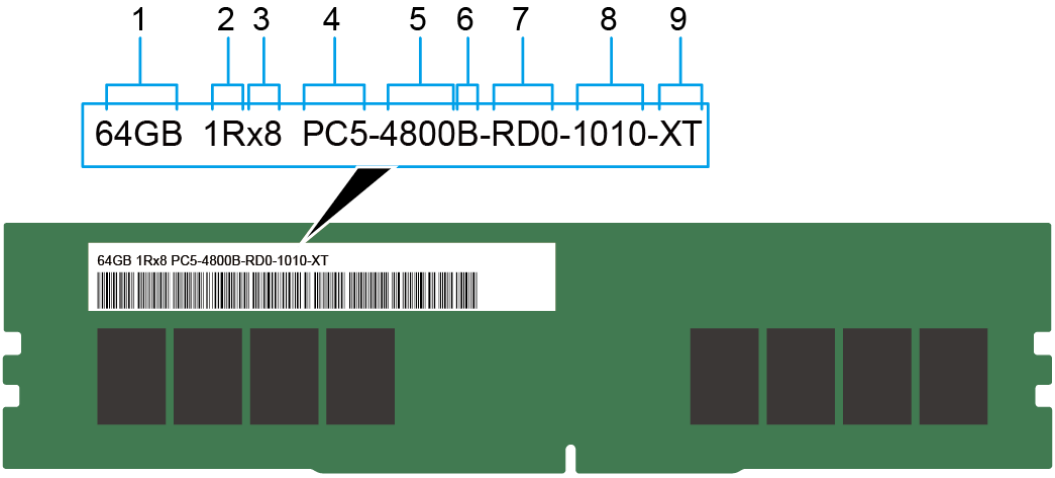

No.	Description	Example
1	Capacity	• 16 GB • 32 GB • 64 GB • 128 GB • 256 GB
2	rank(s)	• 1R = Single rank • 2R = Dual rank • 4R = Quad rank • 8R = Octal rank
3	Data width on the DRAM	• x4: 4-bit • x8: 8-bit
4	Type of the memory interface	• PC5 = DDR5
5	Maximum memory speed	• 4800 MT/s
6	Memory Delay Parameter (CL-nRCD-nRP)	• A = 34-34-34 • B = 40-40-40 • C = 42-42-42
7	DIMM type	• Reference design for version RDIMM D0
8	SPD Version	• 10: SPD version • 10: SPD versions from Byte 192 to Byte 447

 Copyright © xFusion Digital Technologies Co., Ltd.

No.	Description	Example
9	Temperature class	● Extended temperature grade (XT): 0°C to 95°C (32°F to 203°F) ● Normal temperature grade (NT): 0°C to 85°C (32°F to 185°F)

5.4.1.2 Memory Subsystem Architecture

The server provides 32 memory slots. Each processor integrates eight memory channels.

Install the memory modules in the primary memory channels first. If the primary memory channel is not populated, the memory modules in secondary memory channels cannot be used.

Table 5-5 Memory channels

CPU	Channel	Memory Slot
CPU 1	A (primary)	DIMM000(A)
	A	DIMM001(I)
	B (primary)	DIMM010(B)
	B	DIMM011(J)
	C (primary)	DIMM020(C)
	C	DIMM021(K)
	D (primary)	DIMM030(D)
	D	DIMM031(L)
	E (primary)	DIMM040(E)
	E	DIMM041(M)
	F (primary)	DIMM050(F)
	F	DIMM051(N)
	G (primary)	DIMM060(G)
	G	DIMM061(O)
	H (primary)	DIMM070(H)
	H	DIMM071(P)
CPU 2	A (primary)	DIMM100(A)

 Copyright © xFusion Digital Technologies Co., Ltd.

CPU	Channel	Memory Slot
	A	DIMM101(I)
	B (primary)	DIMM110(B)
	B	DIMM111(J)
	C (primary)	DIMM120(C)
	C	DIMM121(K)
	D (primary)	DIMM130(D)
	D	DIMM131(L)
	E (primary)	DIMM140(E)
	E	DIMM141(M)
	F (primary)	DIMM150(F)
	F	DIMM151(N)
	G (primary)	DIMM160(G)
	G	DIMM161(O)
	H (primary)	DIMM170(H)
	H	DIMM171(P)

5.4.1.3 Memory Compatibility

Observe the following rules when configuring DDR5 memory modules:

NOTICE

- A server must use DDR5 memory modules of the same part number (P/N code), and the memory speed is the lower one of the following two speed values:
  - Memory speed supported by a CPU
  - Maximum operating speed of a memory module
- The DDR5 memory modules of different types (RDIMM and RDIMM-3DS) and specifications (capacity, bit width, rank, and height) cannot be used together.
- For details about the optional components, consult the local sales representative or see "OS and Parts Compatibility" in the **Compatibility Checker**.

- The memory module can be used with the new-generation Intel® Xeon® Scalable processors (Sapphire Rapids). The maximum memory capacity supported by all processor models is the same.
- The calculation formula of total memory capacity supported is as follows: the total memory capacity equals the capacity sum of all DDR5 memory modules.

 Copyright © xFusion Digital Technologies Co., Ltd.

- For details about the capacity type of a single memory module, see "Search Parts" in the **Compatibility Checker**.
- The maximum number of memory modules supported depends on the memory module type and number of ranks.

Table 5-6 DDR5 memory parameters

Parameter		Specifications				
Capacity of a DDR5 memory (GB)		16	32	64	128	256
Type		RDIMM	RDIMM	RDIMM	RDIMM-3DS	RDIMM-3DS
Rated speed (MT/s)		4800	4800	4800	4800	4800
Operating voltage (V)		1.1	1.1	1.1	1.1	1.1
Maximum number of DDR5 DIMMs of a server[a]		32	32	32	32	32
Maximum DDR5 memory capacity of the server (GB)		512	1024	2048	4096	8192
Actual rate (MT/s)	1DPC[b]	4800	4800	4800	4800	4800
	2DPC	4400	4400	4400	4400	4400

- a: The maximum number of DDR5 memory modules is based on dual-processor configuration. The number is halved for a server with only one processor.
- b: DIMM per channel (DPC) indicates the number of memory modules per channel.
- The information listed in this table is for reference only. For details, consult the local sales representatives.

5.4.1.4 DIMM Installation Rules

Observe the following rules when configuring DDR5 memory modules:

- At least one DDR5 memory module must be configured with SPR CPU (excluding HBM CPU). SPR HBM CPU can be configured without memory module.
- The memory modules configured must be DDR5 RDIMMs.
- The memory modules must be configured with the same number of ranks.
- Install filler memory modules in vacant slots.

 Copyright © xFusion Digital Technologies Co., Ltd.

5.4.1.5 Positions of the Memory Modules

The server supports up to 32 DDR5 memory modules. Observe the memory module installation rules when configuring memory modules. For details, see the **Server Assembly Guide**.

Figure 5-15 Positions of the memory modules

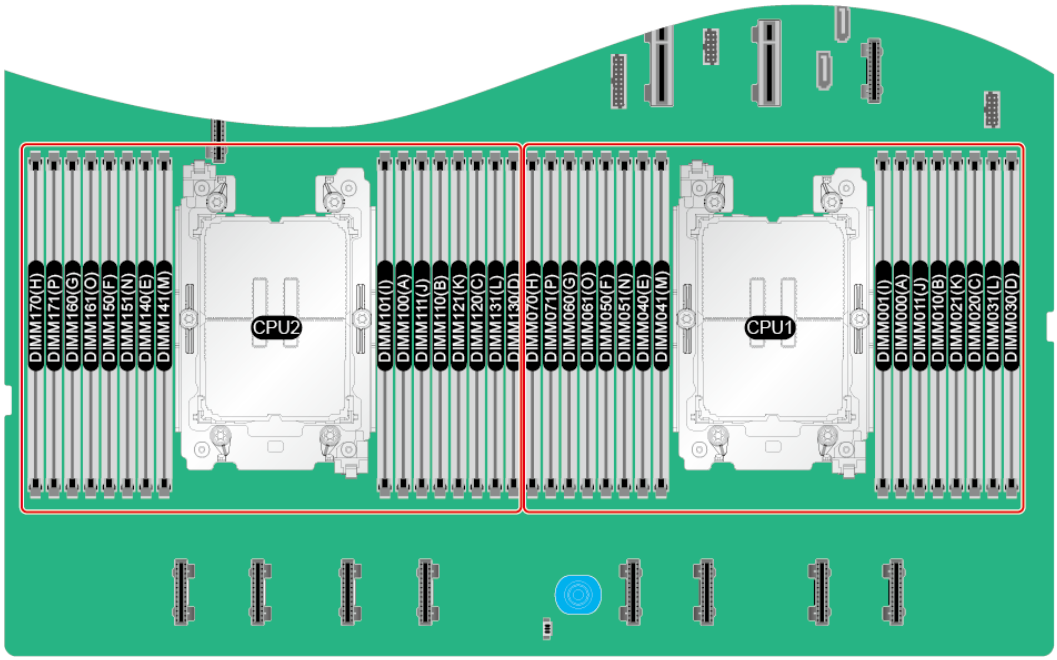

 Copyright © xFusion Digital Technologies Co., Ltd.

Figure 5-16 DDR5 memory module installation guidelines (1 processor)

CPU	Channel	DIMM Slot	Number of DIMMs						
			1	2	4	6	8	12	16
CPU1	A	DIMM000(A)	●	●	●	●	●	●	●
		DIMM001(I)						●	●
	B	DIMM010(B)					●	●	●
		DIMM011(J)							●
	C	DIMM020(C)			●	●	●	●	●
		DIMM021(K)						●	●
	D	DIMM030(D)				●	●	●	●
		DIMM031(L)							●
	E	DIMM040(E)			●	●	●	●	●
		DIMM041(M)						●	●
	F	DIMM050(F)				●	●	●	●
		DIMM051(N)							●
	G	DIMM060(G)		●	●	●	●	●	●
		DIMM061(O)						●	●
	H	DIMM070(H)					●	●	●
		DIMM071(P)							●

 Copyright © xFusion Digital Technologies Co., Ltd.

Figure 5-17 DDR5 memory module installation guidelines (2 processors)

CPU	Channel	DIMM Slot	Number of DIMMs						
			2	4	8	12	16	24	32
CPU1	A	DIMM000(A)	●	●	●	●	●	●	●
		DIMM001(I)						●	●
	B	DIMM010(B)					●	●	●
		DIMM011(J)							●
	C	DIMM020(C)			●	●	●	●	●
		DIMM021(K)						●	●
	D	DIMM030(D)				●	●	●	●
		DIMM031(L)							●
	E	DIMM040(E)			●	●	●	●	●
		DIMM041(M)						●	●
	F	DIMM050(F)				●	●	●	●
		DIMM051(N)							●
	G	DIMM060(G)		●	●	●	●	●	●
		DIMM061(O)						●	●
	H	DIMM070(H)					●	●	●
		DIMM071(P)							●
CPU2	A	DIMM100(A)	●	●	●	●	●	●	●
		DIMM101(I)						●	●
	B	DIMM110(B)					●	●	●
		DIMM111(J)							●
	C	DIMM120(C)			●	●	●	●	●
		DIMM121(K)						●	●
	D	DIMM130(D)				●	●	●	●
		DIMM131(L)							●
	E	DIMM140(E)			●	●	●	●	●
		DIMM141(M)						●	●
	F	DIMM150(F)				●	●	●	●
		DIMM151(N)							●
	G	DIMM160(G)		●	●	●	●	●	●
		DIMM161(O)						●	●
	H	DIMM170(H)					●	●	●
		DIMM171(P)							●

 Copyright © xFusion Digital Technologies Co., Ltd.

5.4.1.6 Memory Protection Technologies

DDR5 memory modules support the following memory protection technologies:

- ECC
- Memory Mirroring
- Memory Single Device Data Correction (SDDC)
- Failed DIMM Isolation
- Memory Thermal Throttling
- Command/Address Parity Check and Retry
- Memory Demand/Patrol Scrubbing
- Memory Data Scrambling
- Post Package Repair (PPR)
- Write Data CRC Protection
- Adaptive Data Correction - Single Region (ADC-SR)
- Adaptive Double Device Data Correction - Multiple Region (ADDDC-MR)
- Partial Cache Line Sparing (PCLS, HBM only)

5.5 Storage

5.5.1 Drive Configuration and Drive Numbering

5.5.1.1 4 x 3.5" Drive Pass-Through Configuration

Drive Configuration

Table 5-7 Drive configuration

Configuration	Front Drive	Rear Drive	Drive Management Mode
4 x 3.5" drive pass-through configuration 1	● Front drives (4 x 3.5"): – Slots 0 to 3 support only SATA drives.	-	● PCH
4 x 3.5" drive pass-through configuration 2	● Front drives (4 x 3.5"): – Slots 0 to 3 support only SAS/SATA drives.	-	● 1 x PCIe RAID controller card The PCIe RAID controller card is installed in slot 1 by default.

 Copyright © xFusion Digital Technologies Co., Ltd.

Configuration	Front Drive	Rear Drive	Drive Management Mode
For details about the optional components, consult the local sales representative or see "OS and Parts Compatibility" in the **Compatibility Checker**.			

Drive Numbering

NOTICE

The drive numbers identified by the RAID controller card vary depending on the cabling of the RAID controller card. This section uses the drive numbers identified by a RAID controller card that adopts the default cabling described in "Internal Cabling" in the *FusionServer 1288H V7 Server Maintenance and Service Guide*.

- Drive numbers of the 4 x 3.5" drive pass-through configuration 1 in **Table 5-7**.

Figure 5-18 Drive numbering

Table 5-8 Drive numbering

Drive Number	Drive Number Displayed on the iBMC WebUI
0	0
1	1
2	2
3	3

- Drive numbers of the 4 x 3.5" drive pass-through configuration 2 in **Table 5-7**.

Figure 5-19 Drive numbering

 Copyright © xFusion Digital Technologies Co., Ltd.

Table 5-9 Drive numbering

Drive Number	Drive Number Displayed on the iBMC WebUI	Drive Number Identified by the RAID Controller Card
0	0	0
1	1	1
2	2	2
3	3	3

5.5.1.2 8 x 2.5" Drive Pass-Through Configuration

Drive Configuration

Table 5-10 Drive configuration

Configuration	Front Drive	Rear Drive	Drive Management Mode
8 x 2.5" drive pass-through configuration 1	• Front drive (8 x 2.5"): – Slots 0 to 7 support only SATA drives.	-	• PCH
8 x 2.5" drive pass-through configuration 2	• Front drive (8 x 2.5"): – Slots 0 to 7 support only SAS/SATA drives.	-	• 1 x PCIe RAID controller card The PCIe RAID controller card is installed in slot 1 by default.
For details about the optional components, consult the local sales representative or see "OS and Parts Compatibility" in the **Compatibility Checker**.			

Drive Numbering

NOTICE

The drive numbers identified by the RAID controller card vary depending on the cabling of the RAID controller card. This section uses the drive numbers identified by a RAID controller card that adopts the default cabling described in "Internal Cabling" in the *FusionServer 1288H V7 Server Maintenance and Service Guide*.

 Copyright © xFusion Digital Technologies Co., Ltd.

- Drive numbers of the 8 x 2.5" drive pass-through configuration 1 in **Table 5-10**.

Figure 5-20 Drive numbering

Table 5-11 Drive numbering

Drive Number	Drive Number Displayed on the iBMC WebUI
0	0
1	1
2	2
3	3
4	4
5	5
6	6
7	7

- Drive numbers of the 8 x 2.5" drive pass-through configuration 2 in **Table 5-10**.

Figure 5-21 Drive numbering

Table 5-12 Drive numbering

Drive Number	Drive Number Displayed on the iBMC WebUI	Drive Number Identified by the RAID Controller Card
0	0	0
1	1	1
2	2	2
3	3	3
4	4	4
5	5	5
6	6	6

 Copyright © xFusion Digital Technologies Co., Ltd.

Drive Number	Drive Number Displayed on the iBMC WebUI	Drive Number Identified by the RAID Controller Card
7	7	7

5.5.1.3 10 x 2.5" Drive Pass-Through Configuration

Drive Configuration

Table 5-13 Drive configuration

Configuration	Front Drive	Rear Drive	Drive Management Mode
10 x 2.5" drive pass-through configuration 1	● Front drive (10 x 2.5"): – Slots 0 to 5 support only SATA drives. – Slots 6 and 7 support only SATA/NVMe drives. – Slots 8 and 9 support only NVMe drives.	-	● SATA drive: PCH ● NVMe drive: CPU pass-through
10 x 2.5" drive pass-through configuration 2	● Front drive (10 x 2.5"): – Slots 0 to 5 support only SAS/SATA drives. – Slots 6 and 7 support SAS/SATA/NVMe drives. – Slots 8 and 9 support only NVMe drives.	-	● SAS/SATA drive: 1 x PCIe RAID controller card The PCIe RAID controller card is installed in slot 1 by default ● NVMe drive: CPU pass-through

 Copyright © xFusion Digital Technologies Co., Ltd.

Configuration	Front Drive	Rear Drive	Drive Management Mode
10 x 2.5" drive pass-through configuration 3	• Front drive (10 x 2.5"): – Slots 0 to 9 support only SAS/SATA drives.	• I/O module 1 (2 x 2.5")[a]: – Slots 12 and 13 support only SAS/SATA drives.	• 1 x PCIe RAID controller card – When I/O module 1 is configured with drives, the PCIe RAID controller card is configured in slot 3 – When I/O module 1 is not configured with drives, the PCIe RAID controller card is configured in slot 1
• a: I/O module 1 (2 x 2.5") is configured with 2 x 2.5" rear drives and PCIe riser modules. For details about the optional components, consult the local sales representative or see "OS and Parts Compatibility" in the **Compatibility Checker**.			

Drive Numbering

NOTICE

The drive numbers identified by the RAID controller card vary depending on the cabling of the RAID controller card. This section uses the drive numbers identified by a RAID controller card that adopts the default cabling described in "Internal Cabling" in the *FusionServer 1288H V7 Server Maintenance and Service Guide*.

- Drive numbers of the 10 x 2.5" drive pass-through configuration 1 in **Table 5-13**.

Figure 5-22 Drive numbering

Table 5-14 Drive numbering

Drive Number	Drive Number Displayed on the iBMC WebUI
0	0
1	1
2	2
3	3
4	4
5	5
6	6
7	7
8	8
9	9

- Drive numbers of the 10 x 2.5" drive pass-through configuration 2 in **Table 5-13**.

Figure 5-23 Drive numbering

Table 5-15 Drive numbering

Drive Number	Drive Number Displayed on the iBMC WebUI	Drive Number Identified by the RAID Controller Card
0	0	0
1	1	1
2	2	2
3	3	3
4	4	4
5	5	5
6	6	6[Note]
7	7	7[Note]
8	8	-
9	9	-

 Copyright © xFusion Digital Technologies Co., Ltd.

Drive Number	Drive Number Displayed on the iBMC WebUI	Drive Number Identified by the RAID Controller Card
Note: If the slot is configured with a SAS/SATA drive, the RAID controller card can manage the drive and allocate a number to the drive.		

- Drive numbers of the 10 x 2.5" drive pass-through configuration 3 in **Table 5-13**.

Figure 5-24 Drive numbering

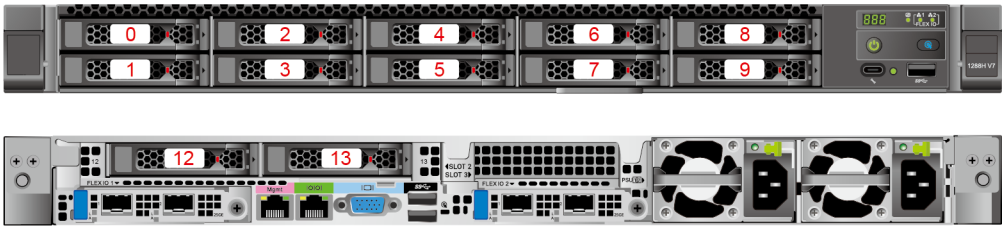

Table 5-16 Drive numbering

Drive Number	Drive Number Displayed on the iBMC WebUI	Drive Number Identified by the RAID Controller Card
0	0	0
1	1	1
2	2	2
3	3	3
4	4	4
5	5	5
6	6	6
7	7	7
8	8	8
9	9	9
12	12	10
13	13	11

 Copyright © xFusion Digital Technologies Co., Ltd.

5.5.1.4 10 x 2.5" Drive NVMe Configuration

Drive Configuration

Table 5-17 Drive configuration

Configuration	Front Drive	Rear Drive	Drive Management Mode
10 x 2.5" Drive NVMe Configuration	• Front drive (10 x 2.5"): – Slots 0 to 9 support NVMe drives.	-	• NVMe drive: CPU pass-through
For details about the optional components, consult the local sales representative or see "OS and Parts Compatibility" in the **Compatibility Checker**.			

Drive Numbering

NOTICE

The drive numbers identified by the RAID controller card vary depending on the cabling of the RAID controller card. This section uses the drive numbers identified by a RAID controller card that adopts the default cabling described in "Internal Cabling" in the *FusionServer 1288H V7 Server Maintenance and Service Guide*.

- Drive numbers of the 10 x 2.5" drive NVMe configuration in **Table 5-17**.

Figure 5-25 Drive numbering

Table 5-18 Drive numbering

Drive Number	Drive Number Displayed on the iBMC WebUI	Drive Number Identified by the RAID Controller Card
0	0	-
1	1	-
2	2	-
3	3	-

 Copyright © xFusion Digital Technologies Co., Ltd.

Drive Number	Drive Number Displayed on the iBMC WebUI	Drive Number Identified by the RAID Controller Card
4	4	-
5	5	-
6	6	-
7	7	-
8	8	-
9	9	-

5.5.2 Drive Indicators

SAS/SATA Drive Indicators

Figure 5-26 SAS/SATA drive indicators

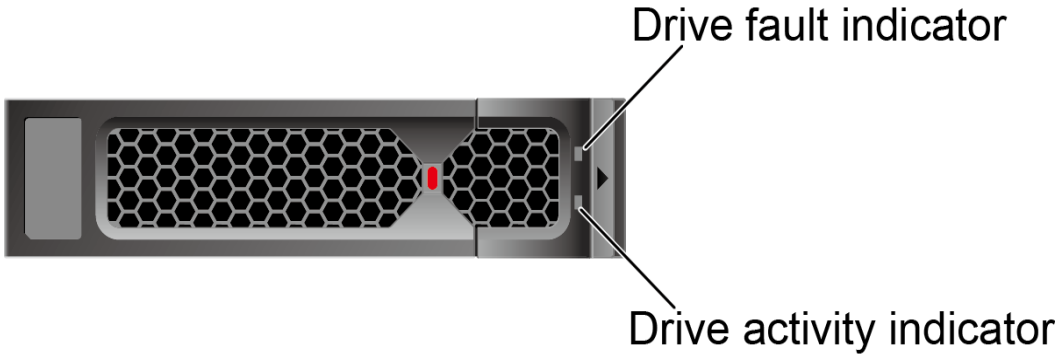

Table 5-19 SAS/SATA drive indicator description

Activity Indicator (Green)	Fault Indicator (Red/Blue)	Description
Off	Off	The drive is not detected.
Steady on	Off	The drive is detected.
Blinking at 4 Hz	Off	Data is being read or written properly, or data on the primary drive is being rebuilt.
Steady on	Blinking blue at 4 Hz	The drive is being located.
Blinking at 1 Hz	Blinking red at 1 Hz synchronously	Data on the secondary drive is being rebuilt.
Off	Red steady on	A drive in a RAID array is removed.

 Copyright © xFusion Digital Technologies Co., Ltd.

Activity Indicator (Green)	Fault Indicator (Red/Blue)	Description
Steady on	Red steady on	The drive is faulty.

NVMe Drive Indicator

Figure 5-27 NVMe drive indicator

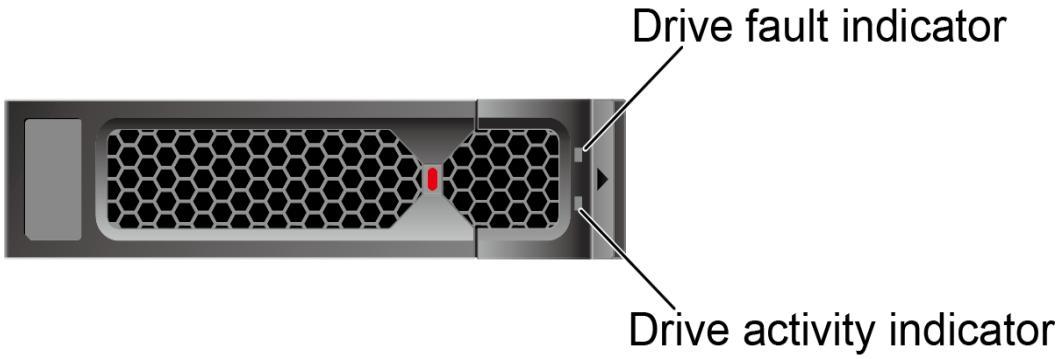

- If the VMD function is enabled and the latest VMD driver is installed, the NVMe drives support surprise hot swap.

  Table 5-20 NVMe drive indicator description (VMD function enabled)

Activity Indicator (Green)	Fault Indicator (Red/Blue)	Description
Off	Off	The NVMe drive is not detected.
Steady on	Off	The NVMe drive is detected and operating properly.
Blinking at 4 Hz	Off	Data is being read from or written to the NVMe drive.
Steady on/ blinking	Blinking blue at 4 Hz	The NVMe drive is being located.
Blinking at 1 Hz	Blinking red at 1 Hz synchronously	Data on the NVMe secondary drive is being rebuilt.
Steady on/Off	Red steady on	The NVMe drive is faulty.

- If the VMD function is disabled, the NVMe drives support only orderly hot swap.

 Copyright © xFusion Digital Technologies Co., Ltd.

Table 5-21 NVMe drive indicator description (VMD function disabled)

Activity Indicator (Green)	Fault Indicator (Red/Blue)	Description
Off	Off	The NVMe drive is not detected.
Steady on	Off	The NVMe drive is detected and operating properly.
Blinking at 4 Hz	Off	Data is being read from or written to the NVMe drive.
Steady on/ blinking	Blinking blue at 4 Hz	The NVMe drive is being located.
Off	Blinking red at 0.5 Hz	The NVMe drive has completed the hot swap process and is removable.
Off	Blinking red at 2 Hz	The NVMe drive is being hot-swapped.
Steady on/Off	Red steady on	The NVMe drive is faulty.

5.5.3 RAID Controller Card

The RAID controller card supports RAID configuration, RAID level migration, and drive roaming.

- For details about the optional components, consult the local sales representative or see "OS and Parts Compatibility" in the **Compatibility Checker**.
- For details about the RAID controller card, see the ***V7 Server RAID Controller Card User Guide***.

5.6 Network

5.6.1 OCP 3.0 NICs

OCP 3.0 NICs provide network expansion capabilities.

- The FlexIO slot supports an OCP 3.0 NIC, which can be configured as required.
- For details about the optional components, consult the local sales representative or see "OS and Parts Compatibility" in the **Compatibility Checker**.
- For details about OCP 3.0 NICs, see the documents of each OCP 3.0 NIC.

5.7 I/O Expansion

5.7.1 PCIe Card

PCIe cards provide ease of expandability and connection.

 Copyright © xFusion Digital Technologies Co., Ltd.

- The server supports a maximum of three standard PCIe expansion slots.
- For details about the optional components, consult the local sales representative or see "OS and Parts Compatibility" in the **Compatibility Checker**.
- When IB cards are used to build an IB network, ensure that the IPoIB modes of the IB cards at both ends of the network connection are the same. For details, contact technical support.

5.7.2 PCIe Slots

PCIe Slots

Figure 5-28 PCIe slots

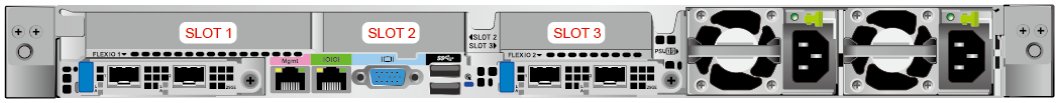

- I/O module 1 provides slots 1 and 2.
- I/O module 2 provides slot 3.

PCIe Riser Card

- PCIe riser card of I/O module 1

  Provides PCIe slots 1 and 2 in I/O module 1.

  Figure 5-29 I/O module 1

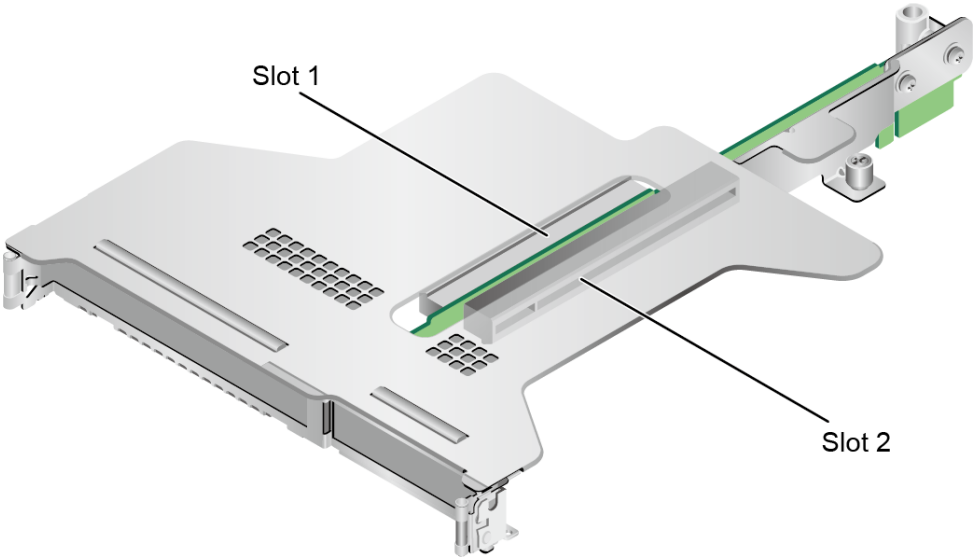

- PCIe riser card of I/O module 2

  Provides PCIe slot 3 in I/O module 2.

 Copyright © xFusion Digital Technologies Co., Ltd.

Figure 5-30 I/O module 2

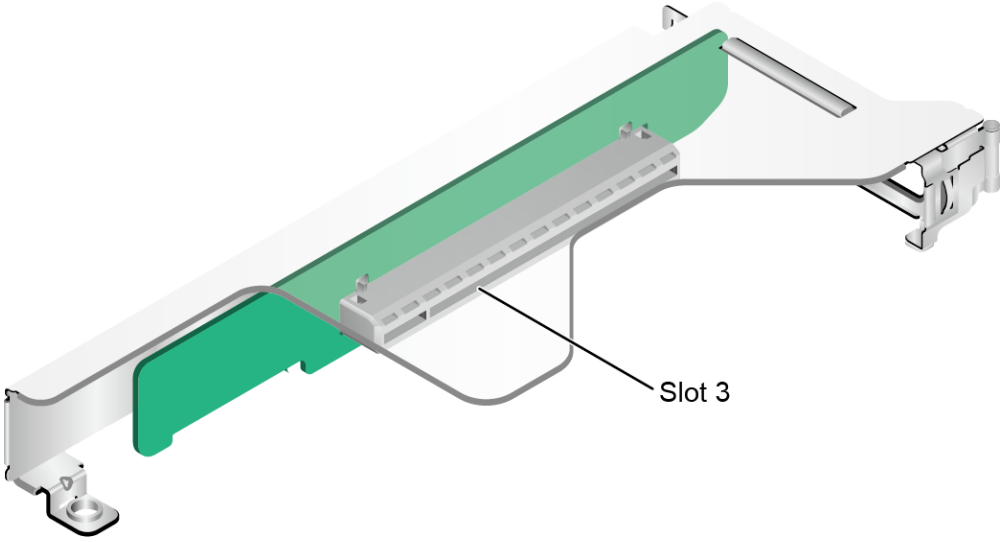

5.7.3 PCIe Slot Description

Server PCIe Slot Information

NOTE

- When CPU 2 is not detected, the corresponding PCIe slot is unavailable.
- The PCIe port numbers in table 1 correspond to CPUs. For details about the PCIe port number displayed on the BIOS screen, see the *Server Eagle Stream Platform BIOS Parameter Reference*.

Table 5-22 PCIe slot description

PCIe Riser Card	PCIe Riser Card Installation Position	PCIe Slots on the PCIe Riser Card	PCIe Slot or Interface Description	CPU	PCIe Port Number	PCIe Devices Supported by the PCIe Slot or Interface
PCIe riser card of I/O module 1	I/O module 1	Slot 1	PCIe4.0 x16[a] (x16)[b]	CPU 1	Port2A	FHHL
		Slot 2	PCIe 4.0 x16 (x16)	CPU 1	Port1A	HHHL
PCIe riser card of I/O module 2	I/O module 2	Slot 3	PCIe 5.0 x16 (x16)	CPU 2	Port0A	HHHL

 Copyright © xFusion Digital Technologies Co., Ltd.

PCIe Riser Card	PCIe Riser Card Installation Position	PCIe Slots on the PCIe Riser Card	PCIe Slot or Interface Description	CPU	PCIe Port Number	PCIe Devices Supported by the PCIe Slot or Interface
-	-	Flex I/O card 1	PCIe4.0 x16 (x8, x16[c], or x8+x8[d])	-	Port0A	OCP 3.0 specifications
-	-	FlexIO card 2	PCIe 4.0 x16 (x8 or x16[e])	-	Port2A	OCP 3.0 specifications

- a: **PCIe 5.0** refers to the PCIe of the fifth generation, and **x16** refers to the physical slot width.
- b: The **x16** in brackets indicates that the link bandwidth is x16.
- c: The default link bandwidth of FlexIO card 1 is x8. The link bandwidth can be extended to x16 using cables.
- d: FlexIO card 1 supports the Socket Direct function when it is connected to the two CPUs through high-speed cables.
- e: The default link bandwidth of FlexIO card 2 is x8. The link bandwidth can be extended to x16 using cables. When FlexIO card 1 supports the Socket-Direct function, FlexIO card 2 can only support x8.
- The PCIe x16 slots are compatible with PCIe x16, PCIe x8, PCIe x4, and PCIe x1 cards. The bandwidth of the PCIe slot cannot be less than that of the inserted PCIe card.
- The FHHL PCIe slots are compatible with FHHL PCIe cards and HHHL PCIe cards.
- The maximum power supply of each PCIe slot is 75 W.

Server Bus/Device/Function Number (B/D/F) Information

The server's B/D/F information may change with PCIe card configurations. You can obtain the B/D/F information of the server using the following methods:

- SOL serial port information: If serial port information has been collected, search the keyword RootBusBDF or DeviceBDF in **systemcom.tar** file to query the B/D/F information of the server.
- You can obtain the B/D/F of the server using the **pci** command. Run the **help pci** command to obtain the specific usage of the **pci** command.
  - Linux OS: You can obtain the B/D/F information of the server using the **lspci -vvv** command.

 Copyright © xFusion Digital Technologies Co., Ltd.

NOTE

If the OS does not support the **lspci** command by default, obtain the **pci-utils** package from the **yum** source and install it to make the OS support the command.

– Windows OS: After installing the **pci-utils** package, run the **lspci** command to obtain the B/D/F information of the server.
– VMware OS: The **lspci** command is supported by default. You can directly obtain the B/D/F information of the server using the **lspci** command.

5.8 PSUs

- Supports one or two PSUs.
- Supports AC or DC PSUs.
- Supports hot swap.
- When two PSUs are configured, 1+1 redundancy is supported.
- PSUs of the same P/N code must be used in a server.
- Short-circuit protection is provided, and bipolar fuses are provided for PSUs that support dual live wire input.
- If the DC power supply is used, purchase the DC power supply that meets the requirements of the safety standards or the DC power supply that has passed the CCC certification.
- For details about the optional components, consult the local sales representative or see "OS and Parts Compatibility" in the **Compatibility Checker**.

Figure 5-31 Positions of PSUs

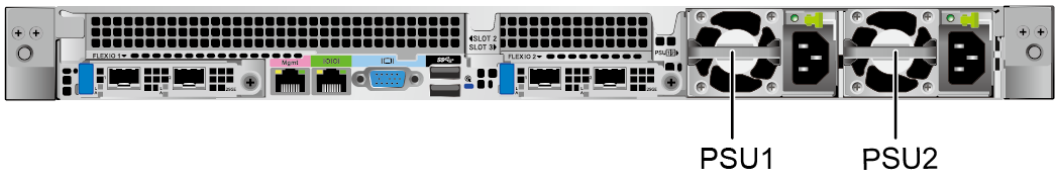

5.9 Fan Module

- Supports eight fan modules.
- Supports hot swap.
- Supports N+1 redundancy. The server runs properly when one fan fails.
- Supports intelligent fan speed adjustment.
- Fan modules of the same part number (P/N code) must be used in a server.

 Copyright © xFusion Digital Technologies Co., Ltd.

Figure 5-32 Positions of the fan modules

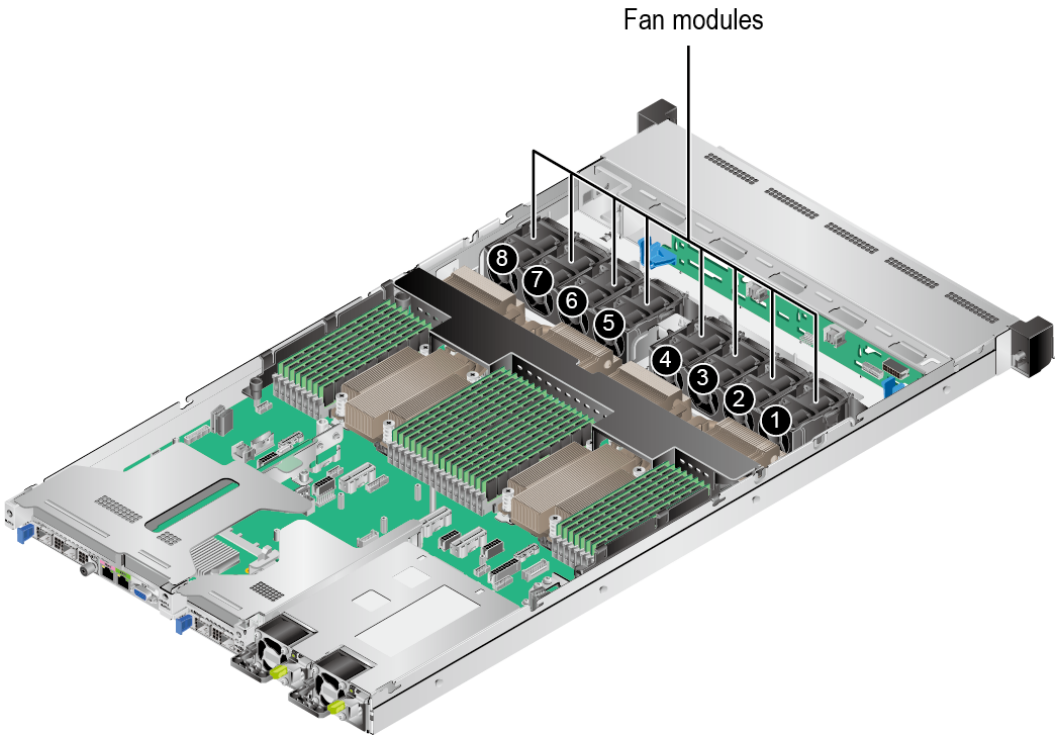

5.10 Board

5.10.1 Mainboard

Figure 5-33 Mainboard

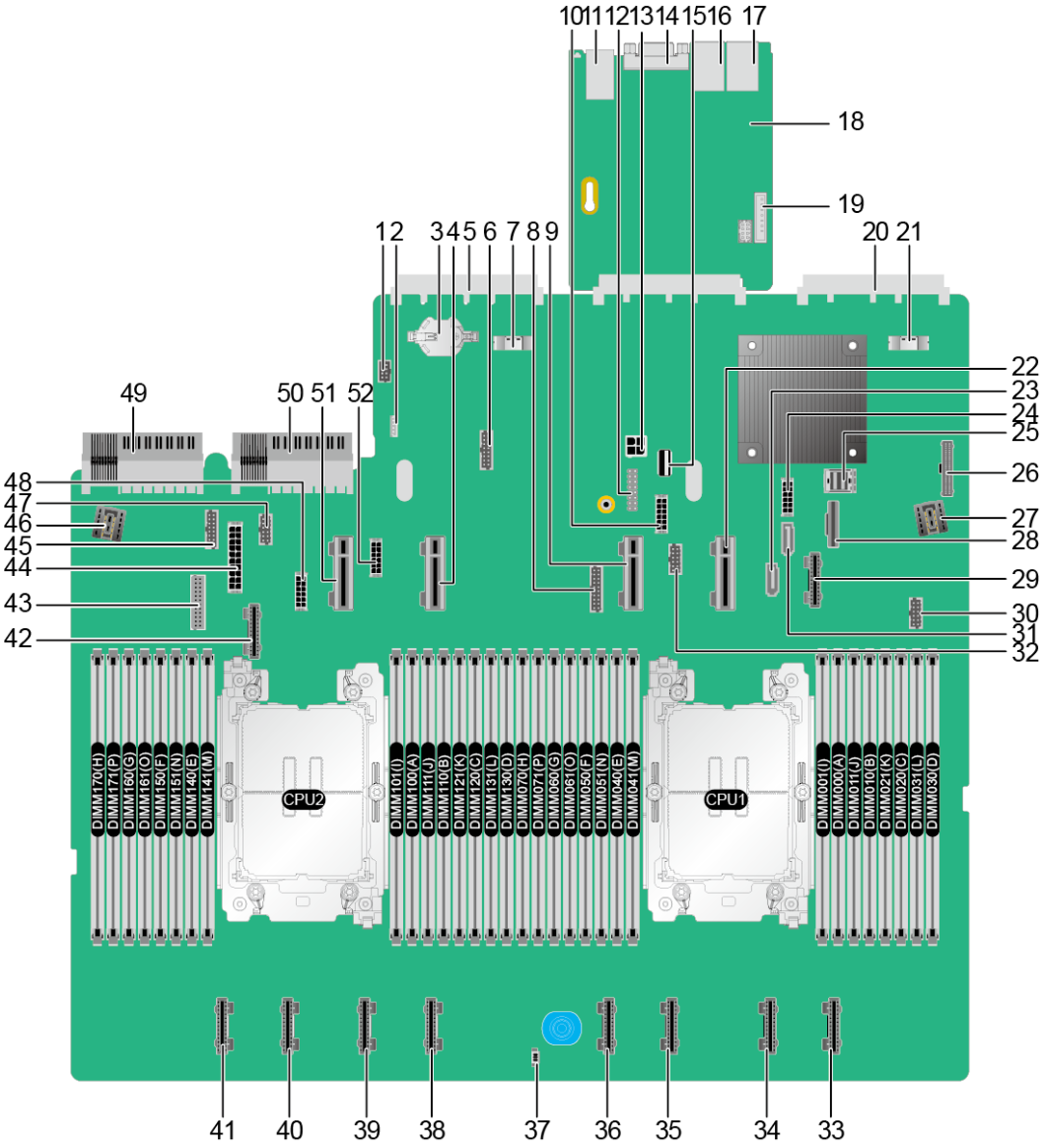

1	Leak detection connector (LIQUID CONN/J6078)[a]	2	VROC key connector (VROC KEY/J6066)
3	Cell battery holder (U6222)	4	CPU 2 UBC DD connector (UBCDD2-7/J6053)
5	OCP 3.0 NIC 2 connector (OCP2 CONN/J6073)	6	RAID&M.2 mezzanine card signal connector (RAID&M.2/J6063)[a]
7	OCP 3.0 NIC 2 UBC connector (UBC2-5/J6071)	8	Built-in HDD backplane & BBU signal connector (INNER BP&BBU/J6084)

 Copyright © xFusion Digital Technologies Co., Ltd.

9	CPU 1 UBC DD connector (UBCDD1-8/J6052)	10	Rear I/O module 2 power connector (IO2 PWR/ J6091)
11	2 x USB 3.0 ports (USB3.0 CONN/J88)	12	TPM/TCM connector (TPM CONN/J6065)
13	Front drive power connector (HDD PWR/ J6105)[a]	14	Rear VGA port (VGA CONN/J60)
15	Built-in USB 2.0 connector (INNER USB2.0/J6067)	16	Serial port (COM/J6020)
17	BMC management port (BMC_GE/J6019)	18	BMC management board
19	LCD connector (LCD CONN/J6025)	20	OCP 3.0 NIC 1 connector (OCP1 CONN/J6072)
21	OCP 3.0 NIC 1 UBC connector (UBC1-5/J42)	22	CPU 1 UBC DD connector (UBCDD1-7/J6051)
23	PCH SATA connector 2 (SATA2/J6099)	24	Rear I/O module 1 power connector (IO1 PWR/ J6092)
25	PCH SATA port C connector (PORTC/J6100)	26	Right mounting ear connector (J6060)
27	Fan board power connector (FAN PWR/J6094)	28	PCH SATA ports A and B connector (PORT A-B/ J6104)
29	CPU 1 northbound UBC connector (UBC1-6/J64)	30	Fan board signal connector (FAN BOARD/J6077)
31	PCH SATA connector 1 (SATA1/J6098)	32	NC-SI connector (NCSI CONN/J31)
33	CPU 1 southbound UBC connector (UBC1-4/J38)	34	CPU 1 southbound UBC connector (UBC1-3/J37)
35	CPU 1 southbound UBC connector (UBC1-2/J49)	36	CPU 1 southbound UBC connector (UBC1-1/J48)
37	Intrusion sensor connector (INTRUDER CONN/S2)	38	CPU 2 southbound UBC connector (UBC2-4/J45)
39	CPU 2 southbound UBC connector (UBC2-3/J44)	40	CPU 2 southbound UBC connector (UBC2-2/J41)
41	CPU 2 southbound UBC connector (UBC2-1/J40)	42	CPU 2 northbound UBC connector (UBC2-6/J53)
43	Left mounting ear connector (J6081)	44	BBU power connector (BBU PWR/J6079)[a]

 Copyright © xFusion Digital Technologies Co., Ltd.

45	Front-drive backplane signal connector (FRONT HDD BP/J6082)	46	Front-drive backplane power connector (FRONT HDD PWR/J6093)[a]
47	Rear I/O module 3 drive backplane signal connector (PSU HDD BP/J6087)[a]	48	Rear I/O module 3 power connector (IO3 PWR/ J6089)
49	PSU 2 connector (PSU2/ J6096)	50	PSU 1 connector (PSU1/ J6095)
51	CPU 2 UBC DD connector (UBCDD2-8/J6054)	52	Built-in drive module power connector (INNER PWR/ J6090)
a: The reserved connector is temporarily unavailable.			

5.10.2 Drive Backplane

Front-Drive Backplane

- 4 x 3.5" drive pass-through backplane

  This backplane is used for all drive configurations described in section **5.5.1.1 4 x 3.5" Drive Pass-Through Configuration**.

  Figure 5-34 4 x 3.5" drive pass-through backplane

No.	Connector	Managed Drive Slot
1	Mini-SAS HD connector (PORT B/J401)	Slots 2 and 3
2	Mini-SAS HD connector (PORT A/J28)	Slots 0 and 1
3	Backplane signal cable connector (HDD BP/ J19)	-
4	Power connector (HDD_POWER/J21)	-

- 8 x 2.5" drive pass-through backplane

  This backplane is used for all drive configurations described in section **5.5.1.2 8 x 2.5" Drive Pass-Through Configuration**.

 Copyright © xFusion Digital Technologies Co., Ltd.

Figure 5-35 8 x 2.5" drive pass-through backplane

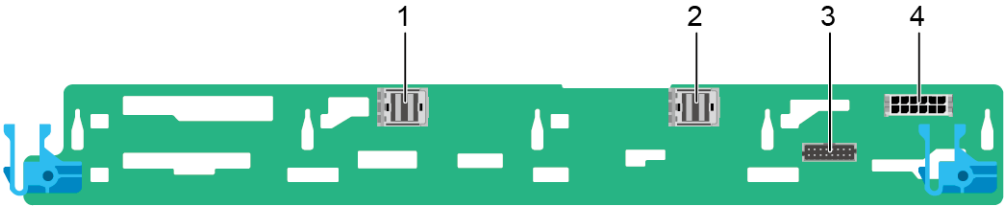

No.	Connector	Managed Drive Slot
1	Mini-SAS HD connector (PORT B/J1)	Slots 4 to 7
2	Mini-SAS HD connector (PORT A/J28)	Slots 0 to 3
3	Backplane signal cable connector (HDD BP/J12)	-
4	Power connector (HDD_POWER/J14)	-

- 10 x 2.5" drive pass-through backplane

  This backplane is used for all drive configurations described in section **5.5.1.3 10 x 2.5" Drive Pass-Through Configuration**.

Figure 5-36 10 x 2.5" drive pass-through backplane

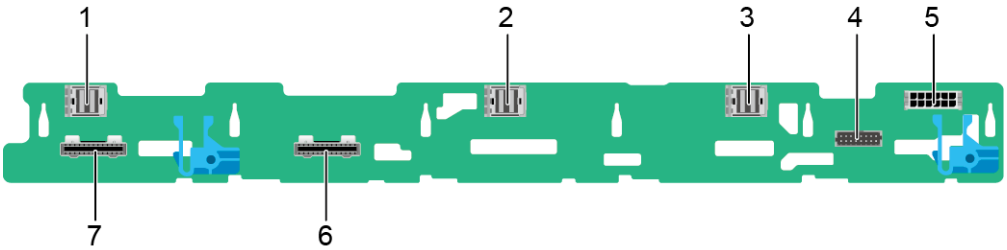

No.	Connector	Managed Drive Slot
1	Mini-SAS HD connector (PORT C/J8)	Slots 8 and 9
2	Mini-SAS HD connector (PORT B/J7)	Slots 4 to 7
3	Mini-SAS HD connector (PORT A/J6)	Slots 0 to 3
4	Backplane signal cable connector (HDD BP/J20)	-

 Copyright © xFusion Digital Technologies Co., Ltd.

No.	Connector	Managed Drive Slot
5	Power connector (HDD_POWER/J21)	-
6	UBC connector 1 (UBC1/J1)	Slots 6 and 7
7	UBC connector 2 (UBC2/J2)	Slots 8 and 9

- 10 x 2.5" drive NVMe backplane

  This backplane is used for all drive configurations described in section **5.5.1.4 10 x 2.5" Drive NVMe Configuration**.

Figure 5-37 10 x 2.5" drive NVMe backplane

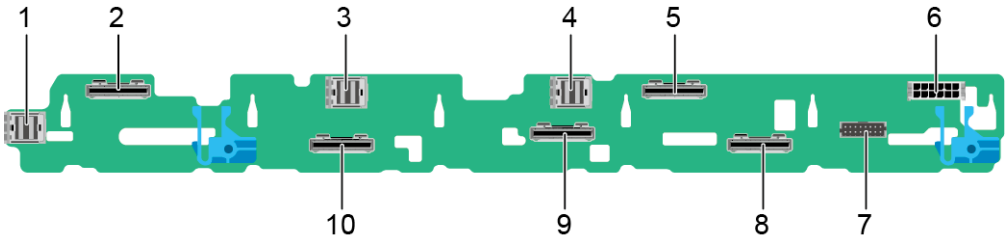

No.	Connector	Managed Drive Slot
1	Mini-SAS HD connector (PORT C/J8)	Slots 8 and 9
2	UBC connector (UBC2CPU0 /J5)	Slot 8~Slot 9
3	Mini-SAS HD connector (PORT B/J7)	Slot 4~Slot 7
4	Mini-SAS HD connector (PORT A/J6)	Slot 0~Slot 3
5	UBC connector (UBC12CPU1 /J2)	Slot 2~Slot 3
6	PSU connector (HDD POWER /J21)	-
7	Indicator signal cable connector (HDD_BP/ J20)	-
8	UBC connector (UBC11CPU1 /J1)	Slot 0~Slot 1
9	UBC connector (UBC13CPU1 /J3)	Slot 4~Slot 5

 Copyright © xFusion Digital Technologies Co., Ltd.

No.	Connector	Managed Drive Slot
10	UBC connector (UBC1CPU0 /J4)	Slot 6~Slot 7

Rear-Drive Backplane

- 2 x 2.5" drive backplane

Figure 5-38 2 x 2.5" drive backplane

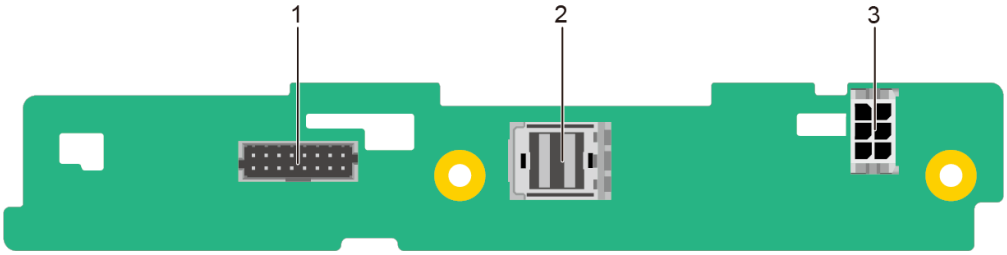

Number	Connector	Managed Drive Slot
1	Indicator signal cable connector (HDD_BP/ J902)	-
2	Mini SAS HD connector (PORT A/J401)	Slot 12~Slot 13
3	Power connector (HDD POWER /J1101)	-

5.10.3 Fan Board

Figure 5-39 Fan board

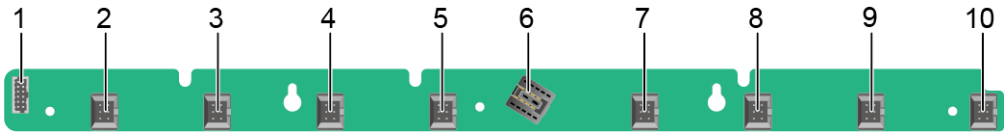

1	Fan board signal connector (FAN_BOARD/J3)	2	Fan connector (FAN8 / J1401)
3	Fan connector (FAN7 / J1301)	4	Fan connector (FAN6 / J1201)
5	Fan connector (FAN5 / J1101)	6	Fan board power connector (J1)

 Copyright © xFusion Digital Technologies Co., Ltd.

7	Fan connector (FAN4 / J1001)	8	Fan connector (FAN3 / J901)
9	Fan connector (FAN2 / J801)	10	Fan connector (FAN1 / J701)

 Copyright © xFusion Digital Technologies Co., Ltd.

6 Specifications

6.1 Technical Specifications

6.2 Environmental Specifications

6.3 Physical Specifications

6.1 Technical Specifications

Table 6-1 Technical specifications

Component	Specifications
Form factor	1U rack server
Chipset	Emmitsburg PCH
Processor	Supports one or two processors. ● New-generation Intel® Xeon® Scalable processors (Sapphire Rapids) ● Built-in memory controller and eight memory channels per processor ● Built-in PCIe controller, supporting PCIe 5.0 and 80 lanes per processor ● Four UltraPath Interconnect (UPI) buses between processors, providing up to 16 GT/s transmission per channel ● Up to 60 cores ● Max. 4.2 GHz turbo frequency ● Min. 1.875 MB L3 cache per core ● Max. 350 W thermal design power (TDP) **NOTE** The preceding information is for reference only. For details, see "Search Parts" in the **Compatibility Checker**.

 Copyright © xFusion Digital Technologies Co., Ltd.

Component	Specifications
Memory	32 memory slots. ● Up to 32 DDR5 DIMMs – RDIMM or RDIMM-3DS support – Max. 4800 MT/s memory speed – DDR5 memory modules of different types (RDIMM and RDIMM-3DS) and specifications (capacity, bit width, rank, and height) cannot be used together. – A server must use DDR5 DIMMs of the same P/N code. **NOTE** The preceding information is for reference only. For details, see "Search Parts" in the **Compatibility Checker**.
Storage	Supports a variety of drive configurations. For details, see **5.5.1 Drive Configuration and Drive Numbering**. ● Supports hot swap of SAS/SATA/NVMe U.2 drives. **NOTE** When you configure NVMe drives: ● Before using the VMD function, contact technical support engineers of the OS vendor to check whether the OS supports the VMD function. If yes, check whether the VMD driver needs to be manually installed and check the installation method. ● When the VMD function is enabled and the latest VMD driver is installed, surprise hot swap is supported. ● When the VMD function is disabled, orderly hot swap is supported. ● Supports a variety of RAID controller cards. For details, see "Search Parts" in the **Compatibility Checker**. – The RAID controller card supports RAID configuration, RAID level migration, and drive roaming. – The RAID controller card supports a supercapacitor for power-off protection to ensure user data security. – The PCIe RAID controller card occupies one PCIe slot. For details about the RAID controller card, see the **V7 Server RAID Controller Card User Guide**. **NOTE** If the BIOS is in legacy mode, the 4K drive cannot be used as the boot drive.

 Copyright © xFusion Digital Technologies Co., Ltd.

Component	Specifications
Network	OCP 3.0 NICs provide network expansion capabilities. ● Supports two OCP 3.0 NICs, which can be configured as required. ● Supports orderly hot swap. **NOTE** The OCP 3.0 NIC supports orderly hot swap only when the VMD function is disabled. ● Supports a variety of OCP 3.0 NICs. For details, see "Search Parts" in the **Compatibility Checker**.
I/O expansion	Supports five PCIe slots. ● Supports two PCIe slots dedicated for OCP 3.0 NICs and three standard PCIe slots. For details, see **5.7.2 PCIe Slots** and **5.7.3 PCIe Slot Description**. **NOTE** The preceding information is for reference only. For details, see "Search Parts" in the **Compatibility Checker**.
Ports	Supports a variety of ports. ● Ports on the front panel: – One USB Type-C iBMC direct connect management port – Two USB 3.0 ports – One DB15 VGA port **NOTE** The front panel of 10 x 2.5" drives provides only one USB Type-C iBMC direct connect management port and one USB 3.0 port. ● Ports on the rear panel: – Two USB 3.0 ports – One DB15 VGA port – One RJ45 serial port – One RJ45 management network port ● Built-in ports: – Two SATA ports **NOTE** You are not advised to install the OS on the USB storage media.

 Copyright © xFusion Digital Technologies Co., Ltd.

Component	Specifications
Video card	An SM750 video chip with 32 MB display memory is integrated on the mainboard. The maximum display resolution is 1920 x 1200 at 60 Hz with 16M colors. **NOTE** ● The integrated video card can provide the maximum display resolution (1920 x 1200) only after the video card driver matching the operating system version is installed. Otherwise, only the default resolution supported by the operating system is provided. ● If both the front and rear VGA ports are connected to monitors, only the monitor connected to the front VGA port displays information.
System management	● UEFI ● iBMC ● NC-SI ● Integration with third-party management systems
Security feature	● Power-on password ● Administrator password ● TPM (for China and outside China)/TCM (only for China) ● Secure boot ● Front bezel (optional) ● Chassis cover opening detection

 Copyright © xFusion Digital Technologies Co., Ltd.

6.2 Environmental Specifications

Table 6-2 Environmental specifications

Item	Specifications
Temperature	● Operating temperature: 5ºC to 45ºC (41ºF to 113ºF) (ASHRAE Classes A1 to A4 compliant) ● Storage temperature (within three months): –30°C to +60°C (–22°F to +140°F) ● Storage temperature (within six months): –15°C to +45°C (5°F to 113°F) ● Storage temperature (within one year): –10°C to +35°C (14°F to 95°F) ● Maximum temperature change rate: 20°C (36°F) per hour and 5°C (9°F) per 15 minutes **NOTE** The operating temperature limitation varies depending on the server configuration. For details, see **A.3 Operating Temperature Limitations**.
Relative humidity (RH, non-condensing)	● Operating humidity: 8% to 90% ● Storage humidity (within three months): 8% to 85% ● Storage humidity (within six months): 8% to 80% ● Storage humidity (within one year): 20% to 75% ● Maximum change humidity rate: 20% per hour
Air volume	≥96CFM
Operating altitude	≤ 3050 m (10,006.56 ft) ● When the server configuration complies with ASHRAE Classes A1 and A2 and the altitude is above 900 m (2952.76 ft), the highest operating temperature decreases by 1ºC (1.8°F) for every increase of 300 m (984.25 ft). ● When the server configuration complies with ASHRAE Class A3 and the altitude is above 900 m (2952.76 ft), the highest operating temperature decreases by 1ºC (1.8°F) for every increase of 175 m (574.15 ft). ● When the server configuration complies with ASHRAE Class A4 and the altitude is above 900 m (2952.76 ft), the highest operating temperature decreases by 1ºC (1.8°F) for every increase of 125 m (410.10 ft). ● HDDs cannot be used at an altitude of over 3050 m (10,006.56 ft).

 Copyright © xFusion Digital Technologies Co., Ltd.

Item	Specifications
Corrosive airborne contaminants	Maximum growth rate of the corrosion product thickness: ● Copper corrosion rate test: 300 Å/month (meeting level G1 requirements of the ANSI/ISA-71.04-2013 standard on gaseous corrosion) ● Silver corrosion rate test: 200 Å/month
Particle contaminant	● Meets the requirements of ISO 14664-1 Class 8. ● There is no explosive, conductive, magnetic, or corrosive dust in the equipment room. **NOTE** It is recommended that the particulate pollution in the equipment room be monitored by a professional agency.
Acoustic noise	The declared A-weighted sound power levels (LWAd) and declared average bystander position A-weighted sound pressure levels (LpAm) listed are measured at 23°C (73.4°F) in accordance with ISO 7779 (ECMA 74) and declared in accordance with ISO 9296 (ECMA 109). ● Idle: – LWAd: 6.1 Bels – LpAm: 45.3 dBA ● Operating: – LWAd: 6.3 Bels – LpAm: 47.6 dBA **NOTE** Actual sound levels generated during operation vary depending on the configuration, load, and ambient temperature.

NOTE

SSDs and HDDs (including NL-SAS, SAS, and SATA) cannot be preserved for a long time in the power-off state. Data may be lost or faults may occur if the preservation duration exceeds the specified maximum duration. When drives are preserved under the storage temperature and humidity specified in the preceding table, the following preservation duration is recommended:

- Maximum preservation duration of SSDs:
  - 12 months in power-off state without data stored
  - 3 months in power-off state with data stored
- Maximum preservation duration of HDDs:
  - 6 months in unpacked/packed and powered-off state
- The maximum preservation duration is determined according to the preservation specifications provided by drive vendors. For details, see the manuals provided by drive vendors.

 Copyright © xFusion Digital Technologies Co., Ltd.

6.3 Physical Specifications

Table 6-3 Physical specifications

Category	Description
Dimensions (H x W x D)	● 3.5" drive chassis: 43 mm x 447 mm x 798 mm (1.69 in. x 17.6 in. x 31.42 in.) ● 2.5" drive chassis: 43 mm x 447 mm x 798 mm (1.69 in. x 17.6 in. x 31.42 in.) **Figure 6-1** Physical dimensions (example: 2.5" drive chassis) 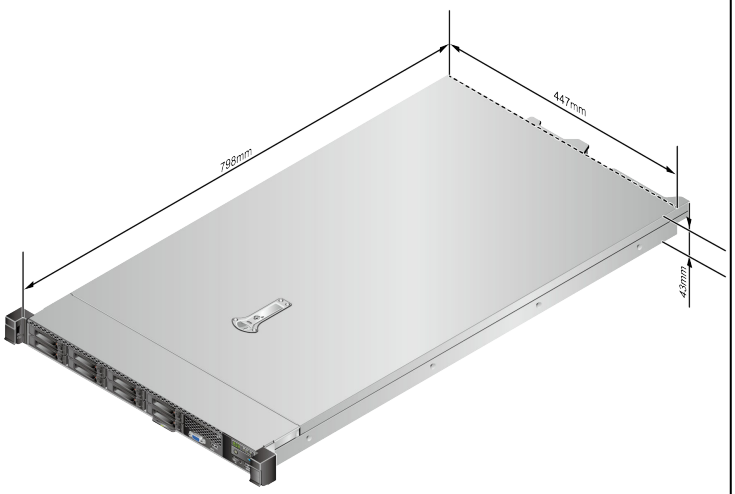 **NOTE** ● See **Figure 6-1** for methods of measuring physical dimensions of the chassis. ● The measuring method for chassis with 3.5" drives and that for chassis with 2.5" drives are the same. The chassis with 3.5" drives is used as an example.

 Copyright © xFusion Digital Technologies Co., Ltd.

Category	Description
Installation space	● Requirements for cabinet installation: Cabinet compliant with the International Electrotechnical Commission (IEC) 297 standard – Cabinet width: 482.6 mm (19.00 in.) – Cabinet depth ≥ 1000 mm (39.37 in.) ● Requirements for guide rail installation: – L-shaped guide rails: apply only to xFusion cabinets. – Adjustable L-shaped guide rails: apply to cabinets with a distance of 543.5 mm to 848.5 mm (21.40 in. to 33.41 in.) between the front and rear mounting bars. – Friction guide rails: apply to cabinets with a distance of 610 mm to 950 mm (24.02 in. to 37.40 in.) between the front and rear mounting bars. – Ball bearing rail kit: applies to cabinets with a distance of 609 mm to 950 mm (23.98 in. to 37.40 in.) between the front and rear mounting bars.
Weight in full configuration	● Net weight: – Maximum weight for server with 4 x 3.5" drives: 20.5 kg (45.19 lb) – Maximum weight for server with 8 x 2.5" drives: 18.0 kg (39.68 lb) – Maximum weight for server with 10 x 2.5" drives: 18.5 kg (40.79 lb) ● Packaging materials: 5 kg (11.03 lb)
Power consumption	The power consumption parameters vary with hardware configurations (including the configurations complying with EU ErP). Use the **Power Calculator** to obtain specific information.

 Copyright © xFusion Digital Technologies Co., Ltd.

7 Software and Hardware Compatibility

For details about the OS and hardware, see the compatibility list on the technical support website.

NOTICE

- If incompatible components are used, the device may be abnormal. Such a fault is beyond the scope of technical support and warranty.
- The performance of servers is closely related to application software, basic middleware software, and hardware. The slight differences of the application software, middleware basic software, and hardware may cause performance inconsistency between the application layer and test software layer.
  - If the customer has requirements on the performance of specific application software, contact technical support to apply for proof of concept (POC) tests in the pre-sales phase to determine detailed software and hardware configurations.
  - If the customer has requirements on hardware performance consistency, specify the specific configuration requirements (for example, specific drive models, RAID controller cards, or firmware versions) in the presales phase.

 Copyright © xFusion Digital Technologies Co., Ltd.

8 Safety Instructions

8.1 Security
8.2 Maintenance and Warranty

8.1 Security

General Statement

- Comply with local laws and regulations when installing equipment. These safety instructions are only a supplement.
- Observe the safety instructions that accompany all "DANGER", "WARNING", and "CAUTION" symbols in this document.
- Observe all safety instructions provided on device labels.
- Operators of special types of work (such as electricians, operators of electric forklifts, and so on.) must be certified or authorized by the local government or authority.

WARNING

In a household scenario, operation of this device may cause radio interference.

Human Safety

- This device is not suitable for use in places where children may be present.
- Only certified or authorized personnel are allowed to install equipment.
- Discontinue any dangerous operations and take protective measures. Report anything that could cause personal injury or device damage to a project supervisor.
- Do not move devices or install cabinets and power cables in hazardous weather conditions.
- Do not carry the weight that exceeds the maximum load per person allowed by local laws or regulations. Before moving a device, check the maximum device weight and arrange required personnel.

 Copyright © xFusion Digital Technologies Co., Ltd.

- Wear clean protective gloves, ESD clothing, a protective hat, and protective shoes, as shown in **Figure 8-1**.

Figure 8-1 Safety work wear

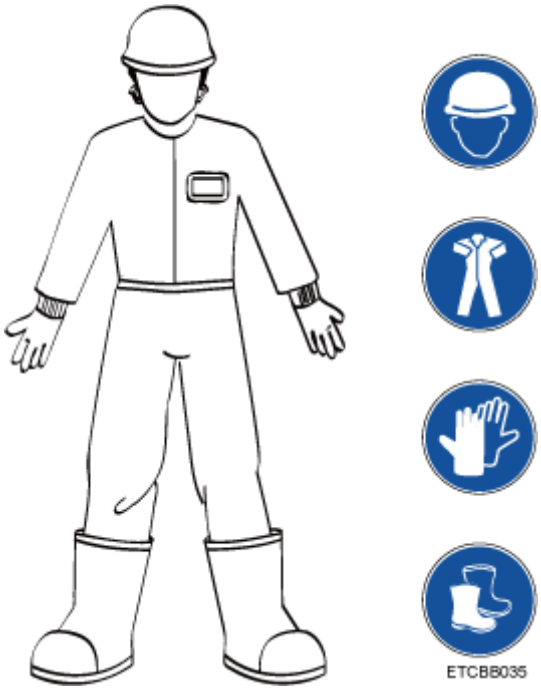

- Before touching a device, wear ESD clothing and gloves (or wrist strap), and remove any conductive objects (such as watches and jewelry). **Figure 8-2** shows conductive objects that must be removed before you touch a device.

Figure 8-2 Removing conductive objects

Figure 8-3 shows how to wear an ESD wrist strap.

a. Secure the ESD wrist strap around your wrist.

b. Fasten the strap buckle and ensure that the ESD wrist strap is in contact with your skin.

c. Insert the ground terminal attached to the ESD wrist strap into the jack on the grounded cabinet or chassis.

 Copyright © xFusion Digital Technologies Co., Ltd.

Figure 8-3 Wearing an ESD wrist strap

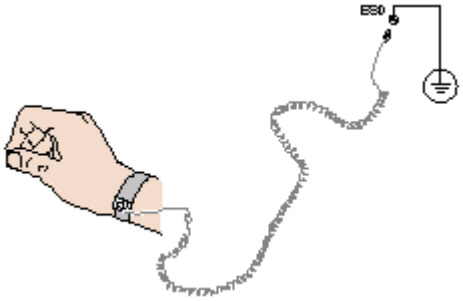

- Exercise caution when using tools that could cause personal injury.
- If the installation position of a device is higher than the shoulders of the installation personnel, use a vehicle such as a lift to facilitate installation. Prevent the device from falling down and causing personal injury or damage to the device.
- The equipment is powered by high-voltage power sources. Direct or indirect contact (especially through damp objects) with high-voltage power sources may result in serious injury or death.
- Ground a device before powering it on. Otherwise, high voltage leakage current may cause personal injury.
- When a ladder is used, ensure that another person holds the ladder steady to prevent accidents.
- Do not look into optical ports without eye protection when installing, testing, or replacing optical cables.

Equipment Safety

- Use the recommended power cables at all times.
- Power cables are used only for dedicated servers. Do not use them for other devices.
- Before operating equipment, wear ESD clothes and gloves to prevent electrostatic-sensitive devices from being damaged by ESD.
- When moving a device, hold the bottom of the device. Do not hold the handles of the installed modules, such as the PSUs, fan modules, drives, and the mainboard. Handle the equipment with care.
- Exercise caution when using tools that could cause damage to devices.
- Connect the primary and secondary power cables to different power distribution units (PDUs) to ensure reliable system operation.
- Ground a device before powering it on. Otherwise, high voltage leakage current may cause device damage.

Transportation Precautions

Improper transportation may damage equipment. Contact the manufacturer for precautions before attempting transportation.

Transportation precautions include but are not limited to:

- The logistics company engaged to transport the device must be reliable and comply with international standards for transporting electronics. Ensure that the

 Copyright © xFusion Digital Technologies Co., Ltd.

equipment being transported is always kept upright. Take necessary precautions to prevent collisions, corrosion, package damage, damp conditions and pollution.

- Transport each device in its original packaging.
- If the original packaging is unavailable, package heavy, bulky parts (such as chassis and blades) and fragile parts (such as PCIe cards and optical modules) separately.

  NOTE

  For details about components supported by the server, see "Search Parts" in the compatibility list on the technical support website.
- Power off all devices before transportation.

Maximum Weight Carried by a Person

CAUTION

The maximum weight allowed to be carried by a single person is subject to local laws or regulations. The markings on the device and the descriptions in the documentation are for reference only.

Table 8-1 lists the maximum weight one person is permitted to carry as stipulated by a number of organizations.

Table 8-1 Maximum weight carried per person

Organization	Weight (kg/lb)
European Committee for Standardization (CEN)	25/55.13
International Organization for Standardization (ISO)	25/55.13
National Institute for Occupational Safety and Health (NIOSH)	23/50.72
Health and Safety Executive (HSE)	25/55.13
General Administration of Quality Supervision, Inspection and Quarantine of the People's Republic of China (AQSIQ)	• Male: 15/33.08 • Female: 10/22.05

For more information about security instructions, see Server Safety Information of corresponding server models.

8.2 Maintenance and Warranty

For details about maintenance, see **Customer Support Service**.

 Copyright © xFusion Digital Technologies Co., Ltd.

For details on warranty, see **Warranty**.

9 System Management

This product integrates the new-generation Intelligent Baseboard Management Controller (iBMC), which complies with Intelligent Platform Management Interface 2.0 (IPMI 2.0) specifications and provides reliable hardware monitoring and management.

The iBMC intelligent management system has the following features:

- Various management interfaces.

  The iBMC provides the following standard interfaces to meet various system integration requirements:

  – DCMI 1.5 interface
  – IPMI 1.5/IPMI 2.0 interface
  – Command-line interface
  – Redfish interface
  – Hypertext Transfer Protocol Secure (HTTPS) interface
  – Simple Network Management Protocol (SNMP) interface

- Fault monitoring and diagnosis

  The iBMC detects hidden risks and ensures stable, uninterrupted 24/7 system operation by providing the following features:

  – The last screenshot and video recording function when the system crashes makes it impossible to analyze the cause of the system crash.
  – Screen snapshots and screen recordings make scheduled inspection, operation recording, and audit easy.
  – The fault diagnosis & management (FDM) function supports component-based precise fault diagnosis, facilitating component fault locating and replacement.
  – The iBMC supports the reporting of alarms through syslog packets, trap packets, and emails, helping the upper-layer NMS platform to collect the fault information about the server.
  – If the server is configured with the LCD module, the LCD can directly obtain device information from the iBMC.

- Security management methods

 Copyright © xFusion Digital Technologies Co., Ltd.

  - Software image backup improves system security. Even if the running software completely breaks down, the system can be started from the backup image.
  - Diversified user security control interfaces are provided to ensure user login security.
  - Multiple certificates can be imported and replaced to ensure data transmission security.
- System maintenance interface
  - Supports virtual keyboard, video, and mouse (KVM) and virtual media functions to facilitate remote maintenance.
  - Supports out-of-band RAID monitoring and configuration to improve RAID configuration efficiency and management capabilities.
  - Smart Provisioning implements DVD-free OS installation, RAID configuration, and upgrades to simplify server installation and configuration.
- Diversified network protocols
  - Supports NTP to improve the device time configuration capability and synchronizes the network time.
  - Supports domain management and directory services to simplify the server management network.
- Intelligent power management
  - Power capping technology makes it easy to increase deployment density.
  - Dynamic energy saving helps reduce the operating expense (OPEX).
- License management

  License management allows advanced features to be used by authorized users.

  The advanced edition of the iBMC provides the following features:
  - Use Redfish to deploy the OS.
  - Use Redfish to collect raw data for intelligent diagnosis.

 Copyright © xFusion Digital Technologies Co., Ltd.

10 Certifications

Country/Region	Certification	Standard
Europe	CE	Safety: EN 62368-1:2014+A11:2017 EMC: ETSI EN 300 386 V2.1.1:2016 ETSI EN 300 386 V1.6.1:2012 EN 55032:2015+A1:2020 CISPR 32:2015+A1:2019 EN IEC 61000-3-2:2019+A1:2021 EN 61000-3-2:2013+A2:2021 EN 61000-3-2:2014 EN 61000-3-3:2013 EN 55035:2017+A11:2020 CISPR 35:2016 EN 55024:2010+A1:2015 CISPR 24:2010+A1:2015 RoHS: EN IEC 63000:2018 ErP: Commission Regulation (EU) No 2019/424

 Copyright © xFusion Digital Technologies Co., Ltd.

Country/Region	Certification	Standard
UK	UKCA	Safety: EN 62368-1:2014+A11:2017 EMC: ETSI EN 300 386 V2.1.1:2016 ETSI EN 300 386 V1.6.1:2012 EN 55032:2015+A1:2020 CISPR 32:2015+A1:2019 EN IEC 61000-3-2:2019+A1:2021 EN 61000-3-2:2013+A2:2021 EN 61000-3-2:2014 EN 61000-3-3:2013 EN 55035:2017+A11:2020 CISPR 35:2016 EN 55024:2010+A1:2015 CISPR 24:2010+A1:2015 RoHS: BS EN IEC 63000:2018 ErP: Commission Regulation (EU) No 2019/424
China	CCC	GB 17625.1-2022 GB 4943.1-2022 GB/T 9254.1-2021 (Class A)
US	FCC	FCC PART 15
Japan	VCCI	VCCI 32-1

 Copyright © xFusion Digital Technologies Co., Ltd.

11 Waste Product Recycling

If product users need product recycling service provided by xFusion after products are scrapped, contact technical support for services.

 Copyright © xFusion Digital Technologies Co., Ltd.

A Appendix

A.1 Chassis Label Information

A.1.1 Chassis Head Label

Figure A-1 Chassis head label

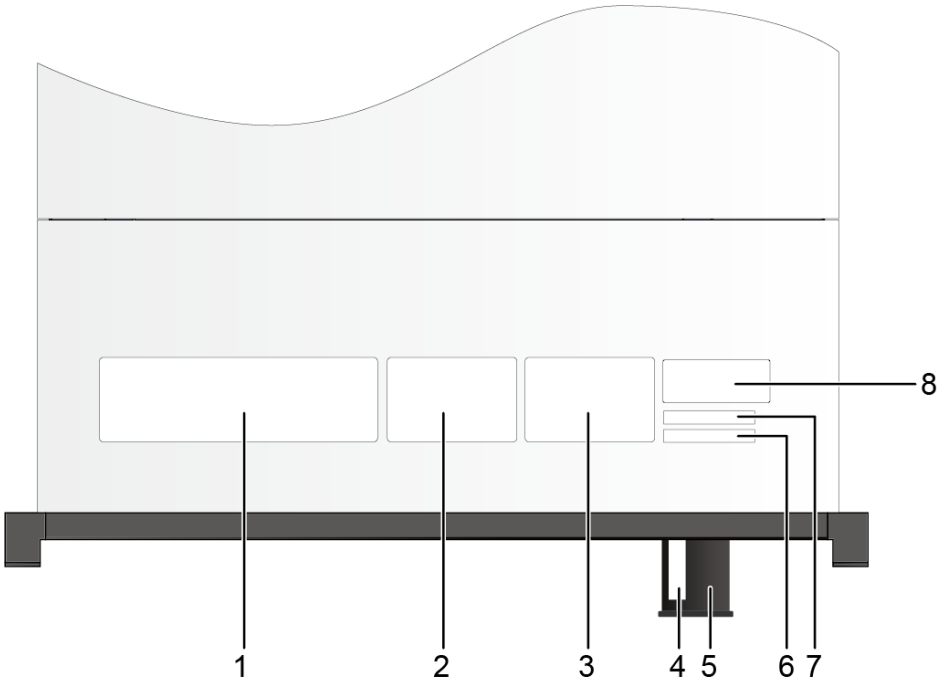

1	Nameplate	2	Certificate
3	Quick access label	4	Product SN **NOTE** For details, see **A.2 Product SN**.

 Copyright © xFusion Digital Technologies Co., Ltd.

5	Slide-out label plate **NOTE** The location of the slide-out label plate varies depending on the server model or configuration. For details, see **5.1.1 Appearance**.	6	Product SN **NOTE** For details, see **A.2 Product SN**.
7	Reserved space for customized label	8	Pressure-proof label **NOTE** This label warns users not to place any objects on top of a rack-mounted device.

A.1.1.1 Nameplate

Figure A-2 Nameplate example

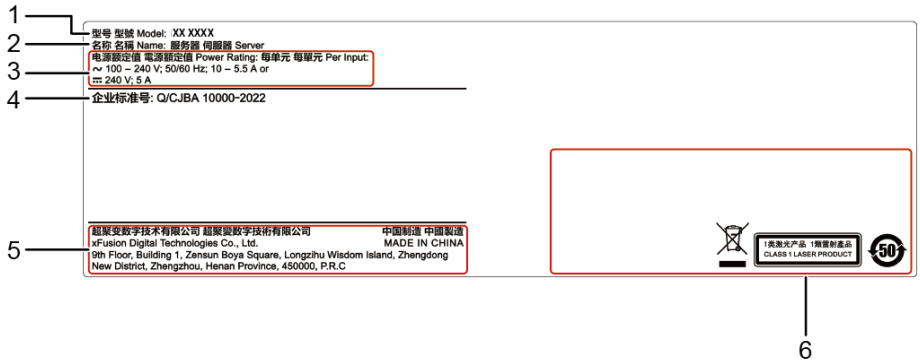

Table A-1 Nameplate description

No.	Description
1	Server model **NOTE** For details, see **A.4 Nameplate**.
2	Device name
3	Power supply requirements
4	Enterprise standard number
5	Vendor information
6	Certification marks

 Copyright © xFusion Digital Technologies Co., Ltd.

A.1.1.2 Certificate

Figure A-3 Certificate example

Table A-2 Certificate description

No.	Description
1	Order
2	No. **NOTE** For details, see **Figure A-4** and **Table A-3**.
3	QC inspector
4	Production date
5	No. barcode

Figure A-4 Certificate number example

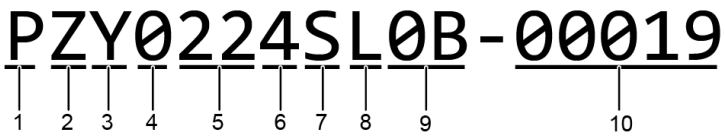

Table A-3 Certificate number description

No.	Description
1	**P**: a fixed value for this digit
2	**Z**: a fixed value for this digit
3	• **Y**: a server • **B**: a semi-finished server • **N**: a spare part

 Copyright © xFusion Digital Technologies Co., Ltd.

No.	Description
4	**0**: a value for the reserved digit
5	Year (two characters)
6	Month (one character) ● Digits 1 to 9 indicate January to September respectively. ● Letters A to C indicate October to December respectively.
7	Day (one character) ● Digits 1 to 9 indicate the 1st to 9th. ● Letters A to H indicate the 10th to 17th. ● Letters J to N indicate the 18th to 22nd. ● Letters P to Y indicate the 23rd to 31st.
8	Hour (one character) ● Digits 0 to 9 indicate 0:00 to 9:00. ● Letters A to H indicate 10:00 to 17:00. ● Letters J to N indicate 18:00 to 22:00. ● Letters P to Q indicate 23:00 to 24:00.
9	Serial number (two characters)
10	Manufacturing serial number (five characters)

A.1.1.3 Quick Access Label

Figure A-5 Quick access label example

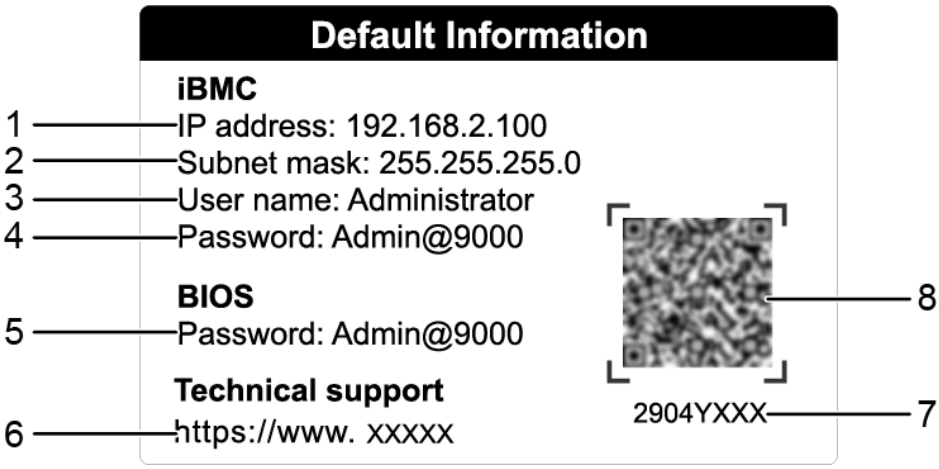

Table A-4 Quick access label description

No.	Description
1	IP address of the iBMC management network port
2	Subnet mask of the iBMC management network port
3	Default iBMC user name
4	Default iBMC password
5	Default BIOS password
6	Technical support website
7	P/N code
8	QR code **NOTE** Scan the QR code to obtain technical support resources.

A.1.2 Chassis Internal Label

Figure A-6 Chassis internal label

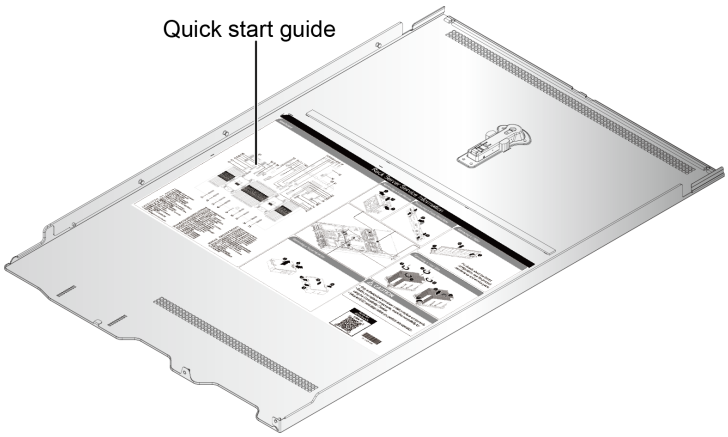

NOTE

- The quick start guide is located on the inside of the chassis cover. It describes how to remove the mainboard components, important components of the chassis, precautions, and QR codes of technical resources. The pictures are for reference only. For details, see the actual product.
- The quick start guide is optional. For details, see the actual product.

 Copyright © xFusion Digital Technologies Co., Ltd.

A.1.3 Chassis Tail Label

Figure A-7 Chassis tail label

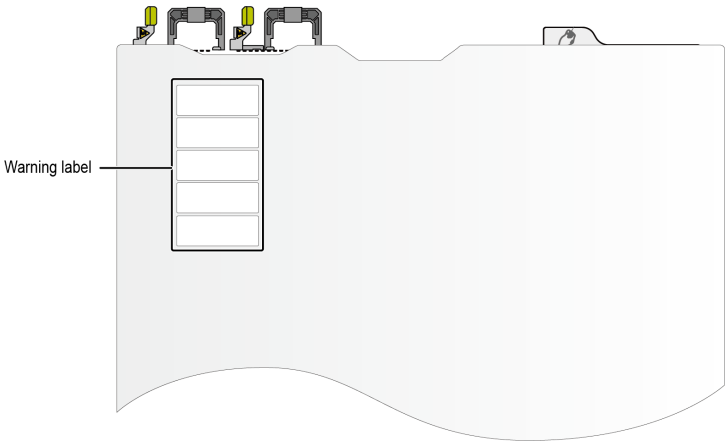

NOTE

For details about the warning label, see the ***Server Safety Information***.

A.2 Product SN

The serial number (SN) on the label plate uniquely identifies a server. The SN is required when users contact xFusion technical support. There are two types of SNs, as shown in **SN example 1** and **SN example 2**.

- SN example 1

Figure A-8 SN example 1

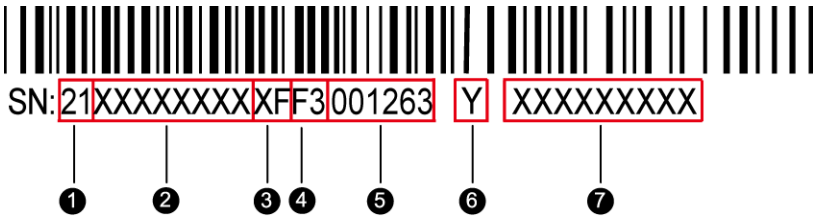

Table A-5 SN description

No.	Description
1	SN ID (two characters), which is **21**.
2	Material identification code (eight characters), that is, the processing code.
3	Vendor code (two characters), that is, the code of the processing place.

 Copyright © xFusion Digital Technologies Co., Ltd.

No.	Description
4	Year and month (two characters) ● The first character indicates the year. – Digits 1 to 9 indicate years 2001 to 2009 respectively. – Letters A to H indicate years 2010 to 2017 respectively. – Letters J to N indicate years 2018 to 2022 respectively. – Letters P to Y indicate years 2023 to 2032 respectively. **NOTE** The years from 2010 are represented by upper-case letters excluding I, O, and Z because the three letters are similar to the digits 1, 0, and 2. ● The second character indicates the month. – Digits 1 to 9 indicate January to September respectively. – Letters A to C indicate October to December respectively.
5	Serial number (six characters)
6	RoHS compliance status (one character). **Y** indicates RoHS compliant.
7	Internal model, that is, product name.

- SN example 2

Figure A-9 SN example 2

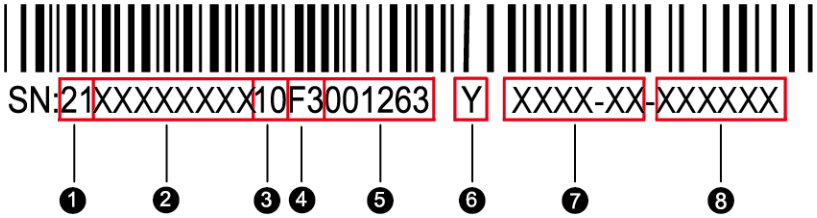

Table A-6 SN example 2

No.	Description
1	SN ID (two characters), which is **21**.
2	Material identification code (eight characters), that is, the processing code.
3	Vendor code (two characters), that is, the code of the processing place.

 Copyright © xFusion Digital Technologies Co., Ltd.

No.	Description
4	Year and month (two characters) ● The first character indicates the year. – Digits 1 to 9 indicate years 2001 to 2009 respectively. – Letters A to H indicate years 2010 to 2017 respectively. – Letters J to N indicate years 2018 to 2022 respectively. – Letters P to Y indicate years 2023 to 2032 respectively. **NOTE** The years from 2010 are represented by upper-case letters excluding I, O, and Z because the three letters are similar to the digits 1, 0, and 2. ● The second character indicates the month. – Digits 1 to 9 indicate January to September respectively. – Letters A to C indicate October to December respectively.
5	Serial number (six characters)
6	RoHS compliance status (one character). **Y** indicates RoHS compliant.
7	Nameplate (six characters).
8	Serial number. The number of digits depends on the actual product.

 Copyright © xFusion Digital Technologies Co., Ltd.

A.3 Operating Temperature Limitations

Table A-7 Operating temperature limitations

Configuration	Maximum Operating Temperature 30℃ (86°F)	Maximum Operating Temperature 35°C (95°F)	Maximum Operating Temperature 40°C (104°F)	Maximum Operating Temperature 45°C (113°F)
4 x 3.5" drive pass-through configuration	● 6434/6434 H and CPUs with TDP greater than 205 W are not supported.	● 6434/6434 H /6438Y+ and CPUs with TDP greater than 205 W are not supported. ● A2 GPU cards are not supported. ● Rear HDDs are not supported.	● CPUs with TDP greater than 185 W are not supported. ● A2 GPU cards are not supported. ● Rear HDDs are not supported. ● Supercapacitors are not supported. ● OCP 3.0 NICs whose rate is greater than 100 Gbit/s are not supported. ● PCIe NICs whose rate is greater than 100 Gbit/s are not supported.	● Not supported.

 Copyright © xFusion Digital Technologies Co., Ltd.

Configuration	Maximum Operating Temperature 30℃ (86°F)	Maximum Operating Temperature 35°C (95°F)	Maximum Operating Temperature 40°C (104°F)	Maximum Operating Temperature 45°C (113°F)
8 x 2.5" drive pass-through configuration	● A2 GPU cards are not supported when the CPU with TDP greater than 270 W is configured.	● A2 GPU cards are not supported. ● Rear HDDs are not supported.	● 6434/6434 H and CPUs with TDP greater than 250 W are not supported. ● A2 GPU cards are not supported. ● Rear HDDs are not supported. ● Supercapacitors are not supported. ● OCP 3.0 NICs whose rate is greater than 100 Gbit/s are not supported. ● PCIe NICs whose rate is greater than 100 Gbit/s are not supported.	● CPUs with TDP greater than 185 W are not supported. ● A2 GPU cards are not supported. ● Rear drives are not supported. ● OCP 3.0 NICs whose rate is greater than 25 Gbit/s are not supported. ● PCIe NICs whose rate is greater than 25 Gbit/s are not supported. ● Supercapacitors are not supported.

 Copyright © xFusion Digital Technologies Co., Ltd.

Configuration	Maximum Operating Temperature 30℃ (86°F)	Maximum Operating Temperature 35°C (95°F)	Maximum Operating Temperature 40°C (104°F)	Maximum Operating Temperature 45°C (113°F)
10 x 2.5" drive pass-through configuration 1 and 2	● A2 GPU cards are not supported when the CPU TDP is higher than 270 W.	● A2 GPU cards are not supported. ● Rear HDDs are not supported.	● 6434/6434 H and CPUs with TDP greater than 250 W are not supported. ● A2 GPU cards are not supported. ● Rear drives are not supported. ● Supercapacitors are not supported. ● OCP 3.0 NICs whose rate is greater than 100 Gbit/s are not supported. ● PCIe NICs whose rate is greater than 100 Gbit/s are not supported.	● CPUs with TDP greater than 185 W are not supported. ● A2 GPU cards are not supported. ● The rear drive is not supported. ● OCP 3.0 NICs whose rate is greater than 25 Gbit/s are not supported. ● PCIe NICs of 25 Gbit/s or higher are not supported. ● Supercapacitors are not supported.

 Copyright © xFusion Digital Technologies Co., Ltd.

Configuration	Maximum Operating Temperature 30℃ (86°F)	Maximum Operating Temperature 35°C (95°F)	Maximum Operating Temperature 40°C (104°F)	Maximum Operating Temperature 45°C (113°F)
10 x 2.5" drive pass-through configuration 3	● A2 GPU cards are not supported when the CPU with TDP greater than 270 W is configured.	● A2 GPU cards are not supported.	● 6434/6434H and CPUs with TDP greater than 250 W are not supported. ● A2 GPUs are not supported. ● Rear drives are not supported. ● Supercapacitors are not supported. ● OCP 3.0 NICs whose rate is greater than 100 Gbit/s are not supported. ● PCIe NICs whose rate is greater than 100 Gbit/s are not supported.	● CPUs with TDP greater than 185 W are not supported. ● A2 GPUs are not supported. ● Rear drives are not supported. ● OCP 3.0 NICs whose rate equals to or is greater than 25 Gbit/s are not supported. ● PCIe NICs whose rate equals to or is greater than 25 Gbit/s are not supported. ● Supercapacitors are not supported.

 Copyright © xFusion Digital Technologies Co., Ltd.

Configuration	Maximum Operating Temperature 30℃ (86°F)	Maximum Operating Temperature 35°C (95°F)	Maximum Operating Temperature 40°C (104°F)	Maximum Operating Temperature 45°C (113°F)
10 x 2.5" drive NVMe configuration	● All configurations are supported.	● A2 GPUs are not supported.	● 6434/6434H and CPUs with TDP greater than 250 W are not supported. ● CPUs with TDP greater than 270 W are not supported. ● A2 GPUs are not supported. ● Rear drives are not supported. ● Supercapacitors are not supported. ● OCP 3.0 NICs whose rate equals to or is greater than 100 Gbit/s are not supported. ● PCIe NICs whose rate equals to or is greater than 100 Gbit/s are not supported.	● CPUs with TDP equals to or is greater than 185 W are not supported. ● A2 GPUs are not supported. ● OCP 3.0 NICs whose rate equals to or is greater than 25 Gbit/s are not supported. ● PCIe NICs whose rate equals to or is greater than 25 Gbit/s are not supported. ● Rear drives are not supported. ● Supercapacitors are not supported.

 Copyright © xFusion Digital Technologies Co., Ltd.

NOTE

- When a single fan is faulty, the highest operating temperature is 5°C (41°F) lower than the rated value.
- When a single fan is faulty, the system performance may be affected.
- It is recommended that servers be deployed at an interval of 1U to reduce server noise and improve server energy efficiency.
- Liquid-cooled processors are not supported.
- Rear GPU cards are not supported for the 4 x 3.5" drive pass-through configuration.
- Rear HDDs are not supported.

A.4 Nameplate

Certified Model	Remarks
H12H-07	Global
1288H V7	Global
Note: The nameplate depends on the actual product.	

A.5 RAS Features

The server supports a variety of Reliability, Availability, and Serviceability (RAS) features. You can configure these features for better performance.

For details about RAS features, see the *FusionServer Sapphire Rapids Platform Server RAS Feature Technical White Paper*.

A.6 Sensor List

Sensor	Description	Component
Inlet Temp	Air inlet temperature	Indicator board
Outlet Temp	Air outlet temperature	BMC card
PCH Temp	PCH bridge temperature	Mainboard
PCH Status	PCH chip fault diagnosis health status	Mainboard
1711 Core Temp	Core temperature of the BMC management chip	BMC card
SSD Max Temp	Maximum SSD temperature (reported by BMA)	SSD

 Copyright © xFusion Digital Technologies Co., Ltd.

Sensor	Description	Component
CPU*N* Core Temp	CPU core temperature	CPU*N* *N* indicates the CPU number. The value is **1** or **2**.
CPU*N* DTS	Difference between the real-time CPU temperature and the CPU core temperature threshold	CPU*N* *N* indicates the CPU number. The value is **1** or **2**.
Cpu*N* Margin	Difference between the real-time CPU temperature and the CPU Tcontrol threshold	CPU*N* *N* indicates the CPU number. The value is **1** or **2**.
CPU*N* MEM Temp	CPU memory module temperature	Memory module corresponding to CPU *N* *N* indicates the CPU number. The value is **1** or **2**.
CPU*N* 12V	12 V voltage supplied by the mainboard to the CPU	Mainboard *N* indicates the CPU number. The value is **1** or **2**.
CPU*N* Status	CPU status detection	CPU*N* *N* indicates the CPU number. The value is **1** or **2**.
CPU*N* Memory	CPU memory status check	Memory module corresponding to CPU *N* *N* indicates the CPU number. The value is **1** or **2**.
CPU*N* UPI Link	CPU UPI link fault diagnosis health status	Mainboard or CPU *N* *N* indicates the CPU number. The value is **1** or **2**.
CPU*N* Prochot	CPU Prochot	CPU*N* *N* indicates the CPU number. The value is **1** or **2**.

 Copyright © xFusion Digital Technologies Co., Ltd.

Sensor	Description	Component
CPU*N* VCCIN	CPU VCCIN voltage	Mainboard *N* indicates the CPU number. The value is **1** or **2**.
CPU*N* FIVRA	CPU FIVRA voltage	Mainboard or CPU *N* *N* indicates the CPU number. The value is **1** or **2**.
CPU*N* INFAON	CPU INFAON voltage	CPU*N* *N* indicates the CPU number. The value is **1** or **2**.
CPU*N* VCCFA	CPU VCCFA voltage	CPU*N* *N* indicates the CPU number. The value is **1** or **2**.
CPU*N* VCCD	CPU VCCD voltage	CPU*N* *N* indicates the CPU number. The value is **1** or **2**.
CPU*N* VRD Temp	CPU VRD temperature	Mainboard *N* indicates the CPU number. The value is **1** or **2**.
CPU*N* FIVRA Temp	CPU FIVRA temperature	CPU*N* *N* indicates the CPU number. The value is **1** or **2**.
CPU*N* INFAON Temp	CPU INFAON temperature	CPU*N* *N* indicates the CPU number. The value is **1** or **2**.
CPU*N* VCCFA Temp	CPU VCCFA temperature	CPU*N* *N* indicates the CPU number. The value is **1** or **2**.
CPU*N* VCCD Temp	CPU VCCD temperature	CPU*N* *N* indicates the CPU number. The value is **1** or **2**.

 Copyright © xFusion Digital Technologies Co., Ltd.

Sensor	Description	Component
PS*N* VIN	PSU *N* input voltage	PSU *N* *N* indicates the PSU number. The value is **1** or **2**.
PS$ IIn	PSU input current	PSUs
PS$ IOut	PSU output current	PSUs
PS$ POut	PSU output power	PSUs
PS$ Temp	Maximum internal temperature of the PSU	PSUs
PS$ Inlet Temp	PSU air inlet temperature	PSUs
PS*N* Status	PSU fault status	PSU *N* *N* indicates the PSU number. The value is **1** or **2**.
PS*N* Fan Status	PSU fan fault status	PSU *N* *N* indicates the PSU number. The value is **1** or **2**.
PS*N* Temp Status	PSU presence status	PSU *N* *N* indicates the PSU number. The value is **1** or **2**.
PS Redundancy	Redundancy failure due to PSU removal	PSUs
Power	Server input power	PSUs
Disks Temp	Maximum drive temperature	Drive
Power*N*	PSU input power	PSU *N* *N* indicates the PSU number. The value is **1** or **2**.
FAN*N* F Speed	Fan speed	Fan module *N* *N* indicates the fan module number. The value ranges from **1** to **8**.
FAN*N* R Speed		
FAN*N* F Status	Fan fault status	Fan module *N* *N* indicates the fan ID. The value ranges from **1** to **8**.
FAN*N* R Status		

 Copyright © xFusion Digital Technologies Co., Ltd.

Sensor	Description	Component
FAN*N* F Presence	Fan presence	Fan module *N* N indicates the fan ID. The value ranges from **1** to **8**.
FAN*N* R Presence		
DIMM*N*	DIMM status	DIMM *N* *N* indicates the DIMM slot number.
RTC Battery	RTC battery status. An alarm is generated when the voltage is lower than 1 V.	RTC battery on the mainboard
Power Button	Power button pressed	Mainboard and power button
Watchdog2	Watchdog	Mainboard
Mngmnt Health	Management subsystem health status	Management module
UID Button	UID button status	Mainboard
PwrOk Sig. Drop	Voltage dip status	Mainboard
PwrOn TimeOut	Power-on timeout	Mainboard
PwrCap Status	Power capping status	Mainboard
HDD Backplane	Entity presence	Drive backplane
HDD BP Status	Drive backplane health status	Drive backplane
HDD BP$ Temp	Drive backplane temperature	Drive backplane
Riser*N* Card	Entity presence	Riser card *N* *N* indicates the riser card slot number. The value is **1** or **2**.
Riser*N* 12V	12 V voltage supplied by the mainboard to the riser card	Mainboard *N* indicates the riser card slot number. The value is **1** or **2**.
Riser$ Temp	Riser card temperature	Riser card
SAS Cable	Entity presence	SAS cable
LCD Status	LCD health status	LCD
LCD Presence	LCD presence	LCD

 Copyright © xFusion Digital Technologies Co., Ltd.

Sensor	Description	Component
DISK$	Drive status	Drive
RAID Presence	RAID controller card presence	RAID controller card
RAID Temp	Temperature of the RAID controller card	RAID controller card
Raid BBU Temp	BBU temperature of the RAID controller card	Supercapacitor of the RAID controller card
PCIE Status	PCIe status error	PCIe card
PCIe$ OP Temp	PCIe card optical module temperature	PCIe card
PCIe$ Temp	PCIe card chip temperature	PCIe card
PCIe RAID$ Temp	Temperature of the PCIe RAID controller card	PCIe RAID controller card
PCIe$ Card BBU	BBU status of the PCIe RAID controller card	PCIe RAID controller card
PCIe NIC$ Temp	PCIe card chip temperature	PCIe card
PCIe FC$ Temp	PCIe card chip temperature	PCIe card
IB$ Temp	IB NIC temperature	IB card
M2 Adapter Temp	M.2 adapter temperature	M.2 adapter card
M2Disk1	Status of the M.2 drive on the riser card	M.2 riser card
M2Disk2	Status of the M.2 drive on the riser card	M.2 riser card
AreaIntrusion	Listening to the unpacking action	Mainboard
OCP$ OP Temp	OCP card optical module temperature	OCP 3.0 NICs
OCP$ Temp	OCP card chip temperature	OCP 3.0 NICs
SSD Disk$ Temp	SSD temperature	SSD
GPU$ Power	GPU card power	GPU card
GPU$ Temp	GPU card temperature	GPU card

 Copyright © xFusion Digital Technologies Co., Ltd.

Sensor	Description	Component
System Notice	Hot restart reminder and fault diagnosis program information collection	N/A
System Error	System suspension or restart. Check the background logs.	
ACPI State	ACPI status	
SysFWProgress	Software processes and system startup errors	
SysRestart	System restart causes	
Boot Error	Boot error	
CPU Usage	CPU usage	
Memory Usage	Memory usage	
BMC Boot Up	BMC startup event	
BMC Time Hopping	Time hopping	
NTP Sync Failed	NTP synchronization failure and recovery events	
SEL Status	SEL full or events being cleared	
Op. Log Full	Operation log full or events being cleared	
Sec. Log Full	Security log full or events being cleared	
Host Loss	System monitoring software (BMA) link loss detection	
ProductID Status	Product identification status	

 Copyright © xFusion Digital Technologies Co., Ltd.

B Glossary

B.1 A-E

B

BMC	The baseboard management controller (BMC) complies with the Intelligent Platform Management Interface (IPMI). It collects, processes, and stores sensor signals, and monitors the operating status of components. The BMC provides the hardware status and alarm information about the managed objects to the management system so that the management system can implement unified management of the devices.

E

ejector lever	A part on the panel of a device used to facilitate installation or removal of the device.
Ethernet	A baseband local area network (LAN) architecture developed by Xerox Corporation by partnering with Intel and DEC. Ethernet uses the Carrier Sense Multiple Access/Collision Detection (CSMA/CD) access method and allows data transfer over various cables at 10 Mbit/s. The Ethernet specification is the basis for the IEEE 802.3 standard.

 Copyright © xFusion Digital Technologies Co., Ltd.

B.2 F-J

G

Gigabit Ethernet (GE)	An extension and enhancement of traditional shared media Ethernet standards. It is compatible with 10 Mbit/s and 100 Mbit/s Ethernet and complies with IEEE 802.3z standards.

H

hot swap	Replacing or adding components without stopping or shutting down the system.

B.3 K-O

K

KVM	A hardware device that provides public keyboard, video and mouse (KVM).

B.4 P-T

P

panel	An external component (including but not limited to ejector levers, indicators, and ports) on the front or rear of the server. It seals the front and rear of the chassis to ensure optimal ventilation and electromagnetic compatibility (EMC).
Peripheral Component Interconnect Express (PCIe)	A computer bus PCI, which uses the existing PCI programming concepts and communication standards, but builds a faster serial communication system. Intel is the main sponsor for PCIe. PCIe is used only for internal interconnection. A PCI system can be transformed to a PCIe system by modifying the physical layer instead of software. PCIe delivers a faster speed and can replace almost all AGP and PCI buses.

 Copyright © xFusion Digital Technologies Co., Ltd.

R

redundancy	A mechanism that allows a backup device to automatically take over services from a faulty device to ensure uninterrupted running of the system.
redundant array of independent disks (RAID)	A storage technology that combines multiple physical drives into a logical unit for the purposes of data redundancy and performance improvement.

S

server	A special computer that provides services for clients over a network.
system event log (SEL)	Event records stored in the system used for subsequent fault diagnosis and system recovery.

B.5 U-Z

U

U	A unit defined in International Electrotechnical Commission (IEC) 60297-1 to measure the height of a cabinet, chassis, or subrack. 1U = 44.45 mm (1.75 in).
UltraPath Interconnect (UPI)	A point-to-point processor interconnect developed by Intel.

 Copyright © xFusion Digital Technologies Co., Ltd.

C Acronyms and Abbreviations

C.1 A-E

A

AC	alternating current
AES	Advanced Encryption Standard New Instruction Set
ARP	Address Resolution Protocol
AVX	Advanced Vector Extensions

B

BBU	backup battery unit
BIOS	Basic Input/Output System
BMC	baseboard management controller

C

CCC	China Compulsory Certification
CD	calendar day
CE	Conformite Europeenne
CIM	Common Information Model
CLI	command-line interface

 Copyright © xFusion Digital Technologies Co., Ltd.

D

DC	direct current
DDR5	Double Data Rate 5
DDDC	double device data correction
DEMT	Dynamic Energy Management Technology
DIMM	dual in-line memory module
DRAM	dynamic random-access memory
DVD	digital video disc

E

ECC	error checking and correcting
ECMA	European Computer Manufacturer Association
EDB	Execute Disable Bit
EID	enclosure ID
EN	European Efficiency
ERP	enterprise resource planning
ETS	European Telecommunication Standards

C.2 F-J

F

FB-DIMM	Fully Buffered DIMM
FC	Fiber Channel
FCC	Federal Communications Commission
FCoE	Fibre Channel over Ethernet
FTP	File Transfer Protocol

G

GE	Gigabit Ethernet

 Copyright © xFusion Digital Technologies Co., Ltd.

GPIO	General Purpose Input/Output
GPU	graphics processing unit

H

HA	high availability
HBM	high bandwidth memory
HDD	hard disk drive
HPC	high-performance computing
HTTP	Hypertext Transfer Protocol
HTTPS	Hypertext Transfer Protocol Secure

I

iBMC	intelligent baseboard management controller
IC	Industry Canada
ICMP	Internet Control Message Protocol
IDC	Internet Data Center
IEC	International Electrotechnical Commission
IEEE	Institute of Electrical and Electronics Engineers
IGMP	Internet Group Message Protocol
IOPS	input/output operations per second
IP	Internet Protocol
IPC	Intelligent Power Capability
IPMB	Intelligent Platform Management Bus
IPMI	Intelligent Platform Management Interface

C.3 K-O

K

KVM	keyboard, video, and mouse

 Copyright © xFusion Digital Technologies Co., Ltd.

L

LC	Lucent Connector
LRDIMM	load-reduced dual in-line memory module
LED	light emitting diode
LOM	LAN on motherboard

M

MAC	media access control
MMC	module management controller

N

NBD	next business day
NC-SI	Network Controller Sideband Interface

O

OCP	Open Compute Project

C.4 P-T

P

PCIe	Peripheral Component Interconnect Express
PDU	power distribution unit
PHY	physical layer
PMBUS	power management bus
POK	Power OK
PWM	pulse-width modulation
PXE	Preboot Execution Environment

 Copyright © xFusion Digital Technologies Co., Ltd.

R

RAID	redundant array of independent disks
RAS	reliability, availability and serviceability
RDIMM	registered dual in-line memory module
REACH	Registration Evaluation and Authorization of Chemicals
RJ45	registered jack 45
RoHS	Restriction of the Use of Certain Hazardous Substances in Electrical and Electronic Equipment

S

SAS	Serial Attached Small Computer System Interface
SATA	Serial Advanced Technology Attachment
SCM	supply chain management
SDDC	single device data correction
SERDES	serializer/deserializer
SGMII	serial gigabit media independent interface
SMI	serial management interface
SMTP	Simple Mail Transfer Protocol
SNMP	Simple Network Management Protocol
SOL	serial over LAN
SONCAP	Standards Organization of Nigeria-Conformity Assessment Program
SSD	solid-state drive
SSE	Streaming SIMD Extension

T

TACH	tachometer signal
TBT	Turbo Boost Technology
TCG	Trusted Computing Group
TCM	trusted cryptography module
TCO	total cost of ownership

 Copyright © xFusion Digital Technologies Co., Ltd.

TDP	thermal design power
TELNET	Telecommunication Network Protocol
TET	Trusted Execution Technology
TFM	TransFlash module
TFTP	Trivial File Transfer Protocol
TOE	TCP offload engine
TPM	trusted platform module

C.5 U-Z

U

UBC	Union Bus Connector
UBC DD	Union Bus Connector Double Density
UDIMM	unbuffered dual in-line memory module
UEFI	Unified Extensible Firmware Interface
UID	unit identification light
UL	Underwriter Laboratories Inc.
UPI	UltraPath Interconnect
USB	Universal Serial Bus

V

VCCI	Voluntary Control Council for Interference by Information Technology Equipment
VGA	Video Graphics Array
VLAN	virtual local area network
VRD	voltage regulator-down
VROC	Virtual RAID on CPU

W

WEEE	waste electrical and electronic equipment

 Copyright © xFusion Digital Technologies Co., Ltd.

WSMAN	Web Service Management