FusionServer XH628 V5 Server Node

Technical White Paper

Issue	**05**
Date	**2023-02-28**

xFusion Digital Technologies Co., Ltd.

Copyrights © xFusion Digital Technologies Co., Ltd. 2023. All rights reserved.

No part of this document may be reproduced or transmitted in any form or by any means without prior written consent of xFusion Digital Technologies Co., Ltd.

Trademarks and Permissions

xFUSION and other xFusion trademarks are trademarks of xFusion Digital Technologies Co., Ltd.

All other trademarks and trade names mentioned in this document are the property of their respective holders.

Notice

In this document, "xFusion" is used to refer to "xFusion Digital Technologies Co., Ltd." for concise description and easy understanding, which does not mean that "xFusion" may have any other meaning. Any "xFusion" mentioned or described hereof may not be understood as any meaning other than "xFusion Digital Technologies Co., Ltd.", and xFusion Digital Technology Co., Ltd. shall not bear any liability resulting from the use of "xFusion".

The purchased products, services and features are stipulated by the contract made between xFusion and the customer. All or part of the products, services and features described in this document may not be within the purchase scope or the usage scope. Unless otherwise specified in the contract, all statements, information, and recommendations in this document are provided "AS IS" without warranties, guarantees or representations of any kind, either express or implied.

The information in this document is subject to change without notice. Every effort has been made in the preparation of this document to ensure accuracy of the contents, but all statements, information, and recommendations in this document do not constitute a warranty of any kind, express or implied.

xFusion Digital Technologies Co., Ltd.

Address: 9th Floor, Building 1, Zensun Boya Square, Longzihu Wisdom Island
Zhengdong New District 450046
Zhengzhou, Henan Province
People's Republic of China

Website: https://www.xfusion.com

Contents

About This Document v
1 Production Introduction 7
2 Features 8
3 Physical Structure 11
4 Logical Structure 14
5 Hardware Description 15
5.1 Front Panel 15
5.1.1 Appearance 15
5.1.2 Indicators and Buttons 17
5.1.3 Ports 21
5.1.4 Installation Positions 23
5.2 Processors 24
5.3 Memory 25
5.3.1 DDR4 Memory 25
5.3.1.1 Memory Identifier 25
5.3.1.2 Memory Subsystem Architecture 26
5.3.1.3 Memory Compatibility 26
5.3.1.4 DIMM Installation Rules 28
5.3.1.5 Memory Installation Positions 29
5.3.1.6 Memory Protection Technologies 30
5.4 Storage 30
5.4.1 Drive Configuration 30
5.4.2 Drive Numbering 31
5.4.3 Drive indicators 35
5.4.4 RAID Controller Card 37
5.5 Network 37
5.5.1 LOMs 37
5.6 I/O Expansion 42
5.6.1 PCIe Cards 42
5.6.2 PCIe Slots 42
5.6.3 PCIe Slot Description 44

5.7 Boards 45
5.7.1 Mainboard 45
6 Product Specifications 47
6.1 Technical Specifications 47
6.2 Environmental Specifications 50
6.3 Physical Specifications 52
7 Software and Hardware Compatibility 53
8 Safety Instructions 54
8.1 Security 54
8.2 Maintenance and Warranty 57
9 System Management 58
A Appendix 60
B Glossary 73
C Acronyms and Abbreviations 76

About This Document

Purpose

This document describes the FusionServer XH628 V5 server node in terms of features, structure, specifications, and component hardware and software compatibility.

Intended Audience

This document is intended for pre-sales engineers.

Symbol Conventions

The symbols that may be found in this document are defined as follows.

Symbol	Description
DANGER	Indicates a hazard with a high level of risk which, if not avoided, will result in death or serious injury.
WARNING	Indicates a hazard with a medium level of risk which, if not avoided, could result in death or serious injury.
CAUTION	Indicates a hazard with a low level of risk which, if not avoided, could result in minor or moderate injury.
NOTICE	Indicates a potentially hazardous situation which, if not avoided, could result in equipment damage, data loss, performance deterioration, or unanticipated results. NOTICE is used to address practices not related to personal injury.
NOTE	Supplements the important information in the main text. NOTE is used to address information not related to personal injury, equipment damage, and environment deterioration.

Change History

Issue	Date	Description
05	2023-02-28	Added A.4 Sensor List.
04	2022-11-11	Updated 8.1 Security.
03	2022-08-12	• Optimized 6.3 Physical Specifications . • Added A.1 Node Label.
02	2022-06-25	• Added a figure that shows how to measure dimensions. • Updated 5.4.1 Drive Configuration and 5.4.2 Drive Numbering.
01	2021-12-20	This issue is the first official release.

1 Production Introduction

The FusionServer XH628 V5 (XH628 V5) is a server node designed for X6800 servers. An X6800 can house up to four XH628 V5 server nodes in a 4U chassis.

The XH628 V5 delivers supreme performance and high storage density in limited space through innovative design. It is easy to manage and maintain.

The XH628 V5 can be configured with 12 3.5-inch or 2.5-inch drives through the HDD drawer, up to 16 DDR4 memory modules, and four PCIe standard cards.

The XH628 V5 is ideal for data center, cloud computing, Big Data, and Internet applications.

Figure 1-1 XH628 V5

2 Features

Performance and Scalability

- Powered by two Intel® Xeon® Scalable Skylake or Cascade Lake processors, the server provides up to 28 cores, 3.8 GHz frequency, a 38.5 MB L3 cache, and two 10.4 GT/s UPI links between the processors, which deliver supreme processing performance.
  - It supports two processors with 56 cores and 88 threads to maximize the concurrent execution of multithreaded applications.
  - An L2 cache is added. Each core can exclusively use 1 MB of L2 cache and at least 1.375 MB of L3 cache.
  - Intel Turbo Boost Technology 2.0 allows processor cores to run faster than the frequency specified in the Thermal Design Power (TDP) configuration if they are operating below power, current, and temperature specification limits.
  - Intel Hyper-Threading Technology enables each processor core to run up to two threads, improving parallel computation capability.
  - The hardware-assisted Intel® Virtualization Technology (Intel® VT) allows operating system (OS) vendors to better use hardware to address virtualization workloads.
  - Intel® Advanced Vector Extensions (Intel AVX 2.0 and Intel AVX-512) significantly accelerate floating-point performance for computing-intensive applications.
  - The Cascade Lake processors support Intel® Deep Learning Boost vector neural network instructions (VNNI) to improve the performance of deep learning applications.
- The 1.2 V DDR4 memory modules consume 20% less power than 1.35 V DDR3L memory modules used by the previous-generation platform.
- The server node supports double data rate 4 (DDR4) registered dual in-line memory modules (RDIMMs) and load-reduced DIMMs (LRDIMMs) with error checking and correcting (ECC). A server node fully configured with sixteen 2933 MT/s memory modules (only available with Cascade Lake processors) provides 2 TB memory space and the maximum theoretical memory bandwidth of 274.97 GB/s.
- With Intel integrated I/O, the Intel® Xeon® Scalable processors integrate the PCIe 3.0 controller to shortens I/O latency and improve overall system performance.

- It supports 12 SATA/SAS HDDs or SSDs. The SSDs deliver higher I/O performance than HDDs. An SSD supports approximately 100 times more I/O operations per second (IOPS) than a typical HDD.
- Four half-height half-length (HHHL) PCIe SSD cards can be configured to support high-bandwidth low-delay data access.

Availability and Serviceability

- Carrier-class components with process expertise ensure high system reliability and availability.
- The server node supports twelve 2.5-inch or 3.5-inch hot-swappable drives. It supports RAID 0, 1, 1E, 5, 6, 10, 50, and 60, depending on the RAID controller card used. It also uses a supercapacitor to protect the RAID cache data against power failures.
- The server provides simplified O&M and efficient troubleshooting through the UID/HLY LED indicators on the front panel, fault diagnosis LED, and iBMC WebUI.
- The SSDs offer better reliability than HDDs, ensuring continued system performance.
- The iBMC monitors system parameters in real time, triggers alarms, and performs recovery actions in case of failures, minimizing system downtime.
- For more information about the warranty in the Chinese market, see Warranty.

Manageability and Security

- The built-in iBMC monitors server operating status and provides remote management.
- The integrated Unified Extensible Firmware Interface (UEFI) improves setup, configuration, and update efficiency and simplifies fault handling.
- The Advanced Encryption Standard–New Instruction (AES NI) algorithm allows faster and stronger encryption.
- Intel Execute Disable Bit (EDB) function prevents certain types of malicious buffer overflow attacks when working with a supported OS.
- The Network Controller Sideband Interface (NC-SI) allows a network port to serve as a management port and a service port for maximized return on investment (ROI) for customers. The NC-SI feature is disabled by default and can be enabled through the iBMC or BIOS.
- The trusted platform module (TPM) 2.0 provides advanced encryption functions, such as digital signatures and remote authentication.

NOTE

The service port with NC-SI enabled supports the following configuration:

- Configuring the LOM port (NIC Mezz) of the server as the service port with NC-SI enabled. LOM port 1 is configured by default.
- Enabling, disabling, and setting a virtual local area network (VLAN) ID for this port. The VLAN ID is **0** and disabled by default.
- Configuring IPv4 addresses (IPv4 address, subnet mask, and gateway) and IPv6 addresses (IPv6 address, prefix length, and gateway) for this port.

Energy Efficiency

- The Intel® Xeon® Scalable processors outperform the previous-generation processors while fitting into the same TDP.
- Efficient voltage regulator-down (VRD) power supplies for boards minimize the energy loss from DC/DC power conversion.
- Intel® Intelligent Power Capability allows a processor to be powered on or off based on requirements.
- Low-voltage Intel® Xeon® Scalable processors consume less energy, ideally suited for data centers and telecommunications environments constrained by power and thermal limitations.
- Staggered spin-up for drives reduces the server boot power consumption.
- The 1.2 V DDR4 RDIMMs consume 20% less energy than 1.5 V DDR3 RDIMMs.
- SSDs consume 80% less power than HDDs.
- The server supports intelligent frequency scaling of processors for energy conservation and consumption reduction.
- The quadrilateral ventilation holes on the node panel provide higher ventilation density than round holes, increasing the system cooling efficiency.

3 Physical Structure

- 2 x 2.5" drive configuration

Figure 3-1 XH628 V5 physical structure

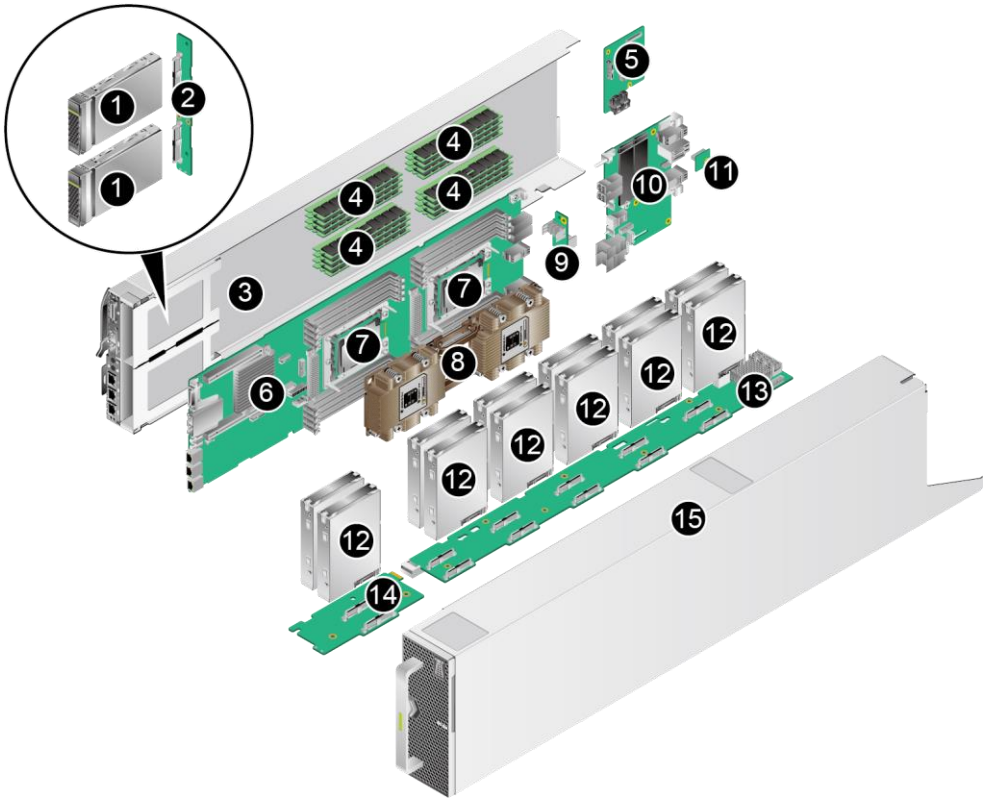

1	Front drives	2	Front-drive backplane
3	Server node case	4	DIMMs
5	Screw-in RAID controller card	6	Mainboard
7	Processors	8	Heat sinks

9	Vertical adapter	10	Horizontal adapter
11	TPM	12	Drives in a drawer
13	10-drive backplane for the drive drawer	14	2-drive backplane for the drive drawer
15	Drive drawer enclosure	-	-

- XH628 V5 with two HHHL PCIe cards

Figure 3-2 XH628 V5 physical structure

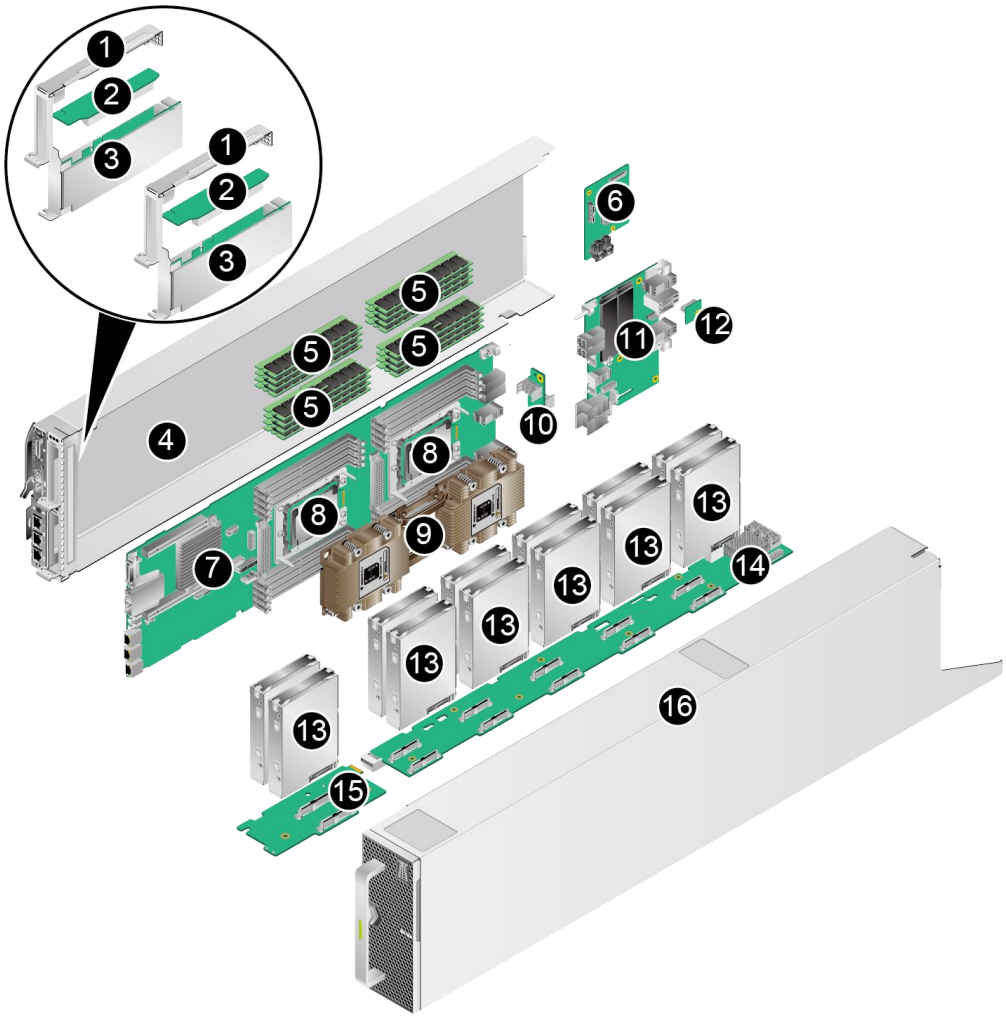

1	Front PCIe card bracket	2	Riser card
3	Front HHHL PCIe card	4	Server node case
5	Memory modules	6	RAID controller card
7	Mainboard	8	Processors

9	Heat sinks	10	Vertical adapter
11	Horizontal adapter	12	TPM
13	Drives in a drawer	14	10-drive backplane for the drive drawer
15	2-drive backplane for the drive drawer	16	Drive drawer enclosure

4 Logical Structure

Figure 4-1 XH628 V5 logical structure

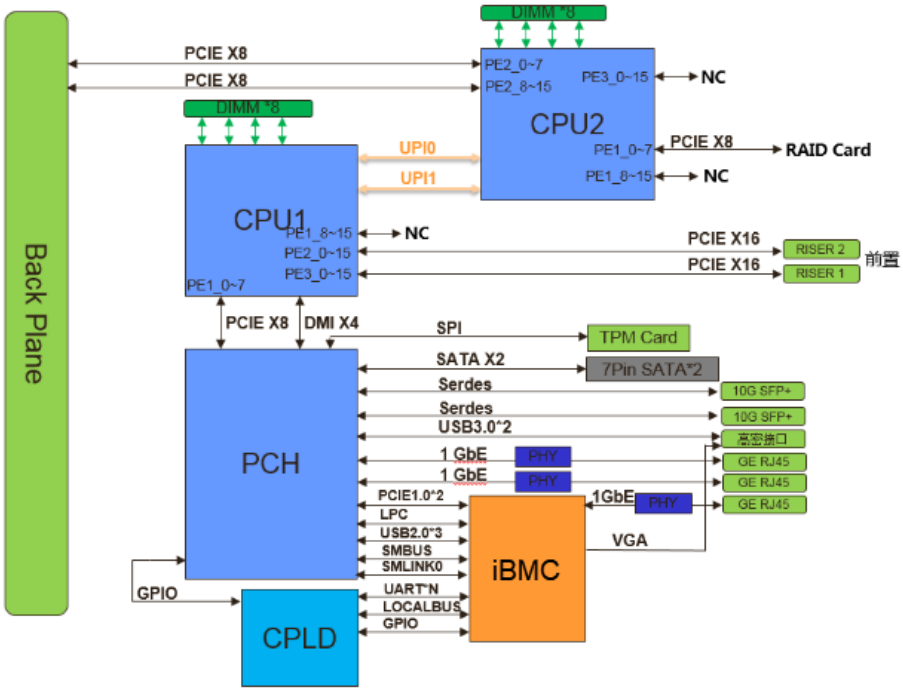

- The server supports two Intel® Xeon® Scalable processors.
- The server supports up to 16 memory modules.
- The CPUs (processors) interconnect with each other through two UPI links at a speed of up to 10.4 GT/s.
- The PCIe cards connected to the processors provide service ports.
- The storage module, consisting of a RAID controller card and a 12-HDD backplane, connects to the processors through PCIe bus.
- The BMC chipset interconnects with the PCH through PCIe and LPC buses to provide a management interface.
- The BMC integrates the graphics card, video compression, and virtual media component to provide device management functions, such as power control, slot ID acquisition, power supply detection, and KVM over IP.

5 Hardware Description

5.1 Front Panel
5.2 Processors
5.3 Memory
5.4 Storage
5.5 Network
5.6 I/O Expansion
5.7 Boards

5.1 Front Panel

5.1.1 Appearance

- 2 x 2.5" drive configuration

Figure 5-1 Front view

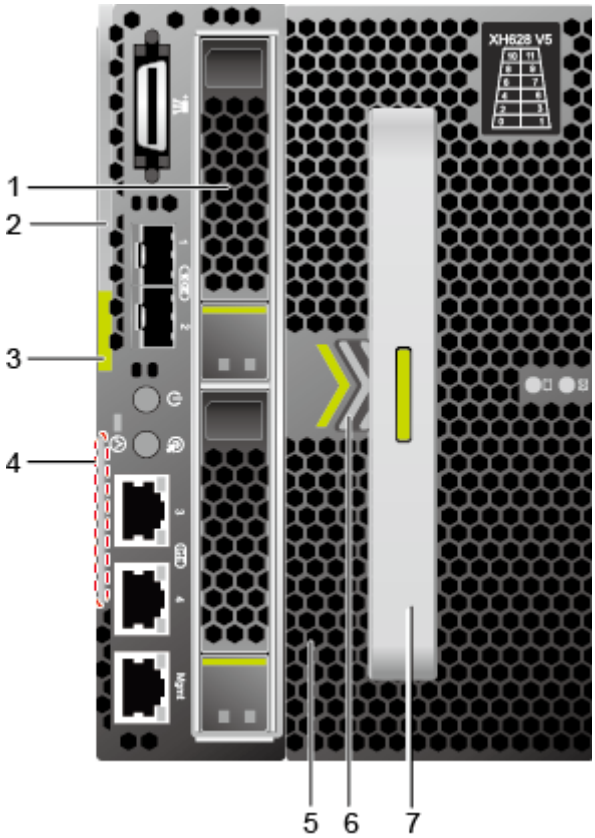

1	Drives	2	Ejector lever
3	Ejector release latch	4	Slide-out label plate (with an SN label)
5	Drive drawer	6	Drive drawer latch
7	Drive drawer handle	-	-

- 2 x HHHL PCIe card configuration

Figure 5-2 Front view

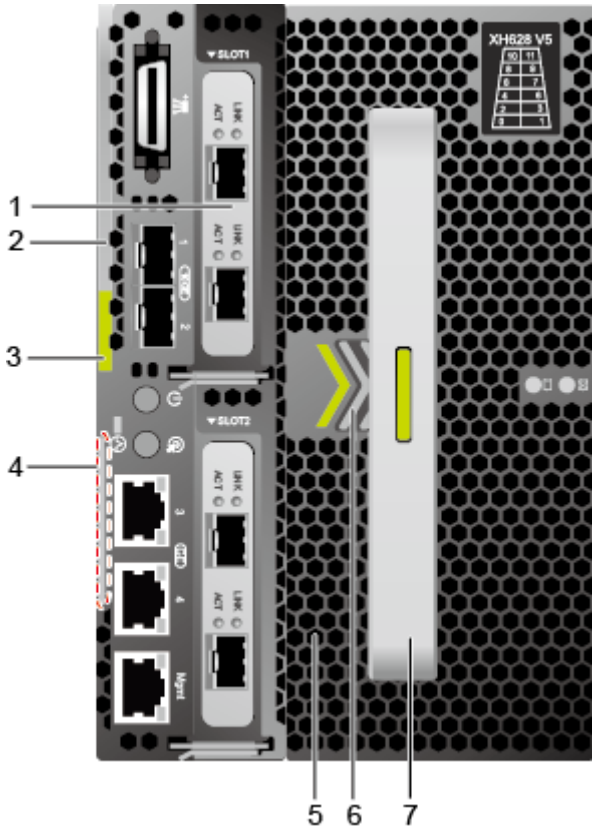

1	Standard PCIe card	2	Ejector lever
3	Ejector release latch	4	Slide-out label plate (with an SN label)
5	Drive drawer	6	Drive drawer latch
7	Drive drawer handle	-	-

5.1.2 Indicators and Buttons

Indicator and Button Positions

- 2 x 2.5" drive configuration

Figure 5-3 Indicators and buttons on the front panel

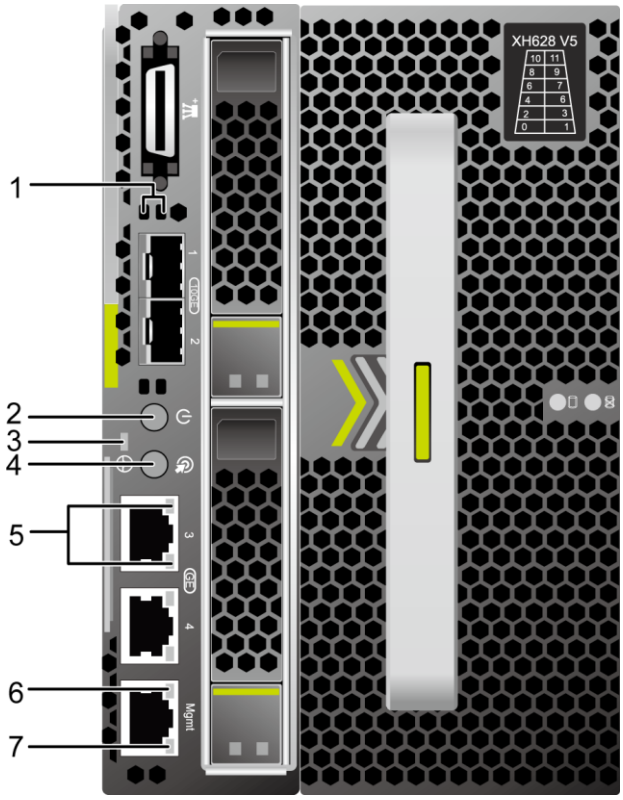

1	LOM port indicator	2	Power button/indicator
3	Health status indicator	4	UID button/indicator
5	LOM port indicator	6	Management network port data transmission status indicator
7	Management network port connection status indicator	-	-

- 2 x HHHL PCIe card configuration

Figure 5-4 Indicators and buttons on the front panel

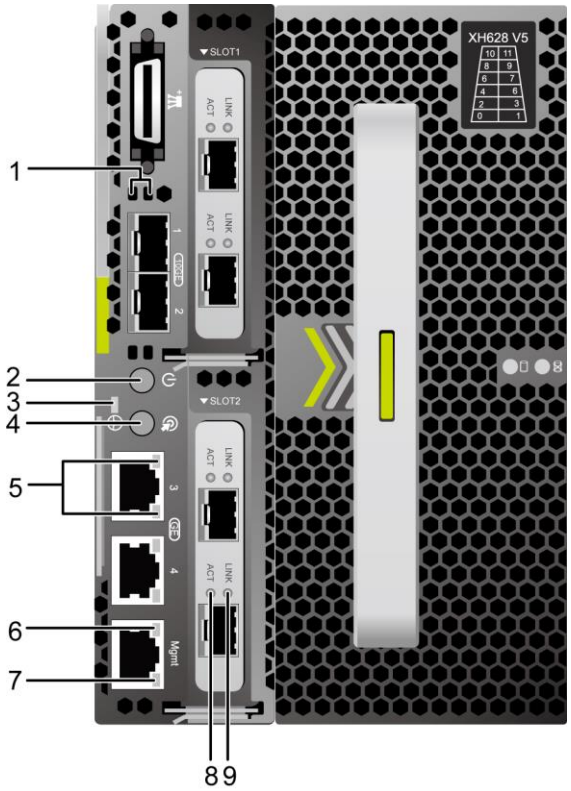

1	LOM port indicator	2	Power button/indicator
3	Health status indicator	4	UID button/indicator
5	LOM port indicator	6	Management network port data transmission status indicator
7	Management network port connection status indicator	8	Network port activity indicator
9	Network port link indicator	-	-

Indicator and Button Descriptions

Table 5-1 Indicators and buttons on the front panel

Silkscreen	Indicator/Button	Description
-	LOM port indicator	For details, see 5.5.1 LOMs .
	Power button/indicato	Power indicator: • Off: The device is not powered on.

Silkscreen	Indicator/Button	Description
	r	• Steady green: The device is powered on. • Blinking yellow: The iBMC is starting. The power button is locked and cannot be pressed. The iBMC is started in about 1 minute, and then the power indicator is steady yellow. • Steady yellow: The device is standby. Power button: • When the device is powered on, you can press this button to gracefully shut down the OS. **NOTE** For different OSs, you may need to shut down the OS as prompted. • When the device is powered on, holding down this button for 6 seconds will forcibly power off the device. • When the power indicator is steady yellow, you can press this button to power on the device.
HLY	Health status indicator	• Off: The device is powered off or is faulty. • Blinking red at 1 Hz: A major alarm has been generated on the system. • Blinking red at 5 Hz: A critical alarm has been generated on the system. • Steady green: The device is operating properly.
	UID button/indicator	The UID button/indicator helps identify and locate a device. UID indicator: • Off: The device is not being located. • Blinking or steady blue: The device is being located. UID button description: • You can control the UID indicator status by pressing the UID button or using the iBMC. • You can press this button to turn on or off the UID indicator. • You can press and hold down this button for 4 to 6 seconds to reset the iBMC.
-	Management network port data transmission status	• Off: No data is being transmitted. • Blinking yellow: Data is being transmitted.

Silkscreen	Indicator/Button	Description
	indicator	
-	Connection status indicator on the management port	• Off: The network port is not connected. • Steady green: The network port is properly connected.
LINK	Network port link indicator	• Off: The network port is not connected. • Steady green: The network port is properly connected.
ACT	Network port activity indicator	• Off: The network port is idle. • Blinking orange: Data is being transmitted.

5.1.3 Ports

Port Positions

- 2 x 2.5" drive configuration

Figure 5-5 Ports on the front panel

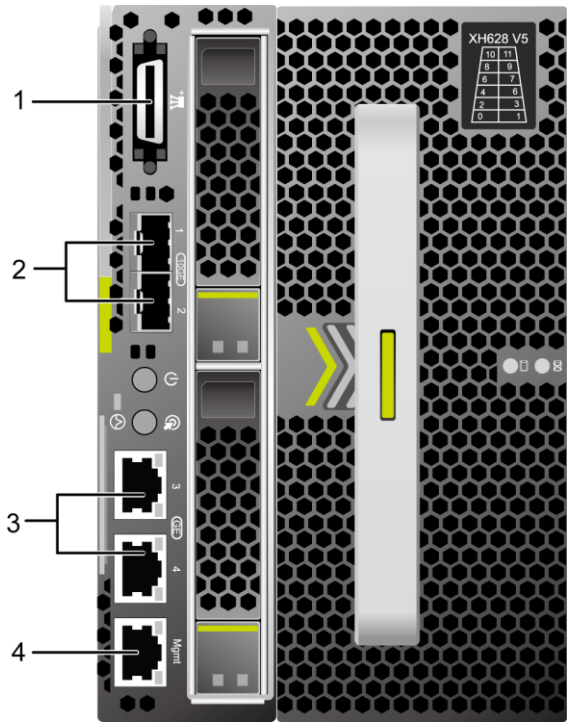

1	Universal connector port	2	LOM port 1
3	LOM port 2	4	Management network port

- 2 x HHHL PCIe card configuration

Figure 5-6 Ports on the front panel

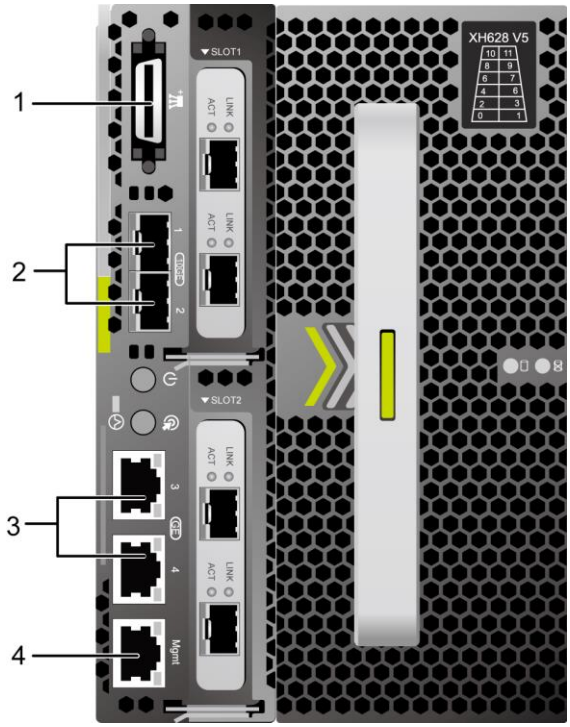

1	Universal connector port	2	LOM port 1
3	LOM port 2	4	Management network port

- Ports on the multi-port cable

Figure 5-7 Multi-port cable

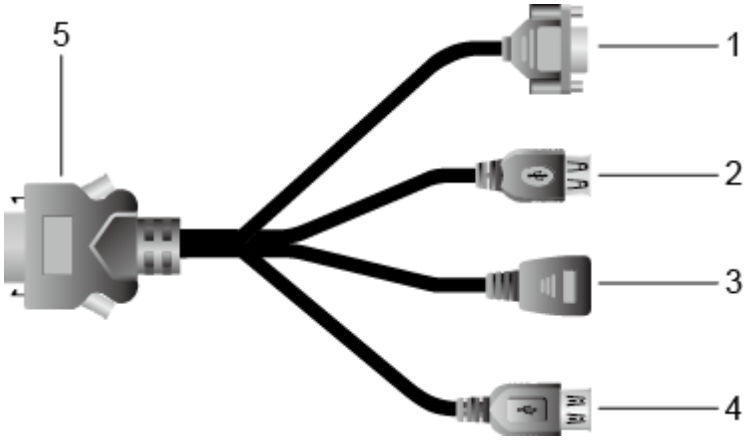

1	VGA port	2	Two USB ports
3	Serial port	4	One USB port
5	Universal connector port	-	-

Port Description

Table 5-2 Description of ports on the front panel

Port	Type	Quantity	Description
LOM port 1	10GE optical port	2	For details, see 5.5.1 LOMs .
LOM port 2	GE electrical port	2	
Universal connector port	-	1	Used to connect a multi-port cable, which provides one DB-15 VGA port, three USB 2.0 ports, and one RJ45 serial port.
Management network port	RJ45	1	Used for server management. **NOTE** The management network port is a GE port that supports 100 Mbit/s and 1000 Mbit/s auto-negotiation.

5.1.4 Installation Positions

An X6800 can house a maximum of four XH628 V5 nodes in a 4U chassis.

Figure 5-8 Installation positions

NOTE

The PCIe slots and RAID controller card in the rear chassis are connected to CPU 2 of each XH628 V5.

5.2 Processors

- The server supports two processors.
- The same model of processors must be used in a server.
- Contact your local sales representative or use the Compatibility Checker to determine the components to be used.

Figure 5-9 Processor positions

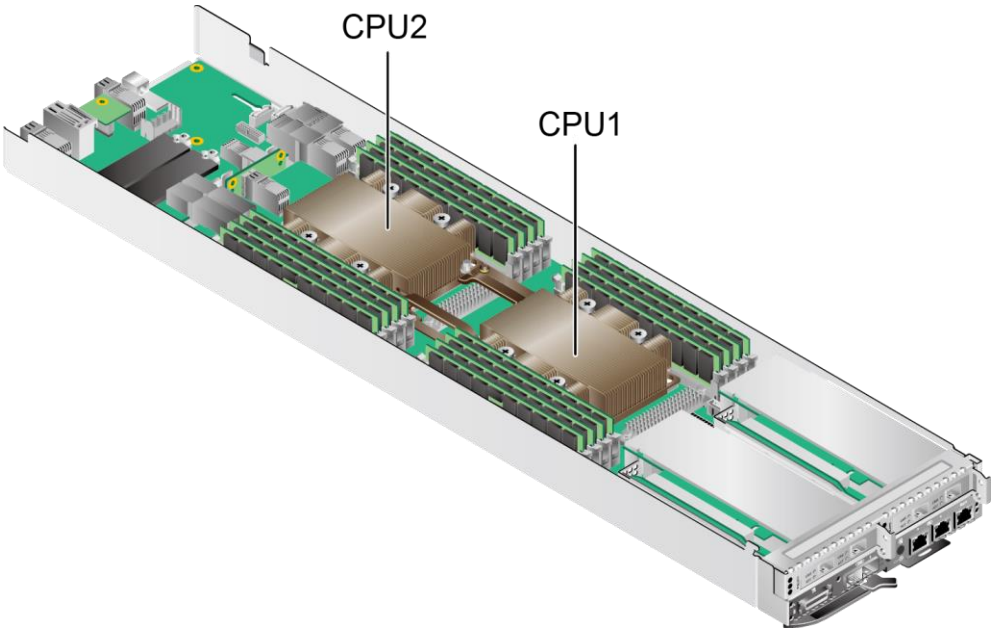

5.3 Memory

5.3.1 DDR4 Memory

5.3.1.1 Memory Identifier

You can determine the memory module properties based on the label attached to the memory module.

Figure 5-10 Memory identifier

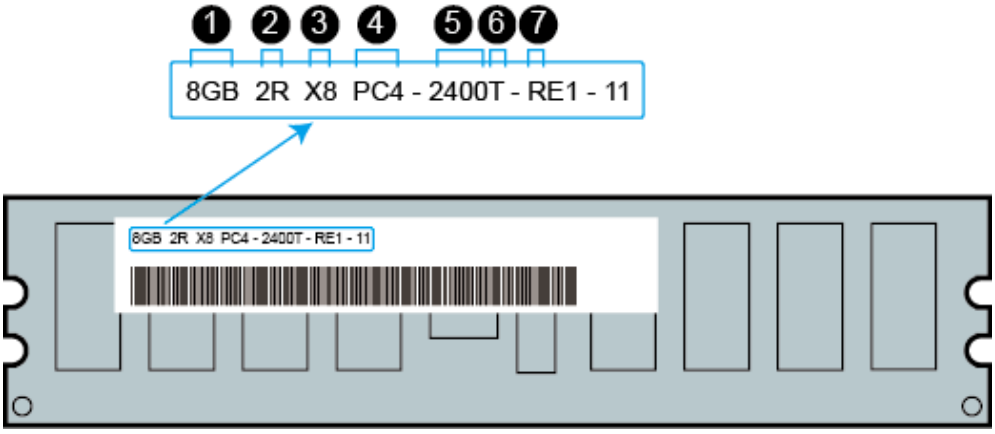

Callout	Description	Definition
1	Capacity of the memory module	• 8 GB • 16 GB • 32 GB • 64 GB • 128 GB
2	Number of ranks of the memory module	• 1R: single-rank • 2R: dual-rank • 4R: quad-rank • 8R: octal-rank
3	Data width on the DRAM	• X4: 4-bit • X8: 8-bit
4	Type of the memory interface	• PC3: DDR3 • PC4: DDR4
5	Maximum memory speed	• 2133 MT/S • 2400 MT/S • 2666 MT/S • 2933 MT/S • 3200 MT/S

Callout	Description	Definition
6	Column Access Strobe (CAS) latency	• P: 15 • T: 17
7	DIMM type	• R: RDIMM • L: LRDIMM

5.3.1.2 Memory Subsystem Architecture

The XH628 V5 provides 16 memory slots. Each processor integrates six memory channels.

Install the memory modules in the primary memory channels first. If the primary memory channel is not populated, the memory modules in secondary memory channels cannot be used.

Table 5-3 Memory channels

CPU	Memory Channel	Memory Slot
CPU 1	1A (primary)	DIMM000(A)
	1A	DIMM001(G)
	1B	DIMM010(B)
	1C	DIMM020(C)
	1D (primary)	DIMM030(D)
	1D	DIMM031(H)
	1E	DIMM040(E)
	1F	DIMM050(F)
CPU 2	2A (primary)	DIMM100(A)
	2A	DIMM101(G)
	2B	DIMM110(B)
	2C	DIMM120(C)
	2D (primary)	DIMM130(D)
	2D	DIMM131(H)
	2E	DIMM140(E)
	2F	DIMM150(F)

5.3.1.3 Memory Compatibility

Observe the following rules when configuring DDR4 DIMMs:

NOTICE

- A server must use the same model of DDR4 DIMMs, and all the DIMMs operate at the same speed, which is the smallest value of:
- Memory speed supported by a processor
- Maximum operating speed of a DIMM
- The DDR4 DIMMs of different types (RDIMM and LRDIMM) and specifications (capacity, bit width, rank, and height) cannot be used together.
- Contact your local sales representative or use the Compatibility Checker to determine the components to be used.

- The memory can be used with Intel® Xeon® Scalable Skylake and Cascade Lake processors. The maximum memory capacity supported varies depending on the processor model.
  - Skylake processors
    - M processors: 1.5 TB/socket
    - Other processors: 768 GB/socket
  - Cascade Lake processors
    - L processors: 4.5 TB/socket
    - M processors: 2 TB/socket
    - Other processors: 1 TB/socket
- The total memory capacity is the sum of the capacity of all DDR4 DIMMs.

NOTICE

The total memory capacity cannot exceed the maximum memory capacity supported by the CPUs.

- Use the Compatibility Checker to determine the capacity type of a single memory module.
- The maximum number of DIMMs supported by a server varies depending on the CPU type, memory type, rank quantity, and operating voltage.

NOTE

Each memory channel supports a maximum of 8 ranks. The number of DIMMs supported by each channel varies depending on the number of ranks supported by each channel:

Number of DIMMs supported by each channel ≤ Number of ranks supported by each memory channel/Number of ranks supported by each DIMM

- A memory channel supports more than eight ranks for LRDIMMs.

NOTE

A quad-rank LRDIMM generates the same electrical load as a single-rank RDIMM on a memory bus.

Table 5-4 DDR4 DIMM specifications

Parameters	Specifications

Parameters		Specifications
Maximum capacity per DDR4 DIMM (GB)		64
Rated speed (MT/s)		2933
Operating voltage (V)		1.2
Maximum number of DDR4 DIMMs in a node[a]		16
Maximum DDR4 memory capacity of the node (GB)[b]		1024
Maximum operating speed (MT/s)	1DPC[c]	2933[d]
	2DPC	2666

- a: The maximum number of DDR4 memory modules is based on dual-processor configuration.
- b: The maximum DDR4 memory capacity varies depending on the processor type. The value listed in this table is based on the assumption that DIMMs are fully configured.
- c: DPC (DIMM per channel) indicates the number of DIMMs per channel.
- d: If the Cascade Lake processor is used, the maximum operating speed of a DIMM can reach 2933 MT/s. If the Skylake processor is used, the maximum operating speed of a DIMM can reach 2666 MT/s only. Different CPUs possess different specifications, For details about the CPU parameters, see the Intel official website.
- The information listed in this table is for reference only. For details, consult the local sales representative.

5.3.1.4 DIMM Installation Rules

- Observe the following when configuring DDR4 memory modules:
  - Install memory modules only when corresponding processors are installed.
  - Do not install LRDIMMs and RDIMMs in the same server.
  - Install filler memory modules in vacant slots.
- Observe the following when configuring DDR4 memory modules in specific operating mode:
  - Memory sparing mode
    - Comply with the general installation guidelines.
    - Each memory channel must have a valid online spare configuration.
    - The channels can have different online spare configurations.
    - Each populated channel must have a spare rank.
  - Memory mirroring mode
    - Comply with the general installation guidelines.
    - Each processor supports two integrated memory controllers (IMCs). At least two channels of each IMC are used for installing memory modules (channels 1 and 2, or channels 1, 2, and 3). The installed memory modules must be identical in size and organization.

- For a multi-processor configuration, each processor must have a valid memory mirroring configuration.

– Memory scrubbing mode

- Comply with the general installation guidelines.

5.3.1.5 Memory Installation Positions

An XH628 V5 supports a maximum of 16 DDR4 DIMMs. To maximize the performance, balance the total memory capacity between the installed processors and load the channels similarly whenever possible.

NOTICE

At least one DDR4 DIMM must be installed in the memory slots corresponding to CPU 1.

Figure 5-11 Memory slots

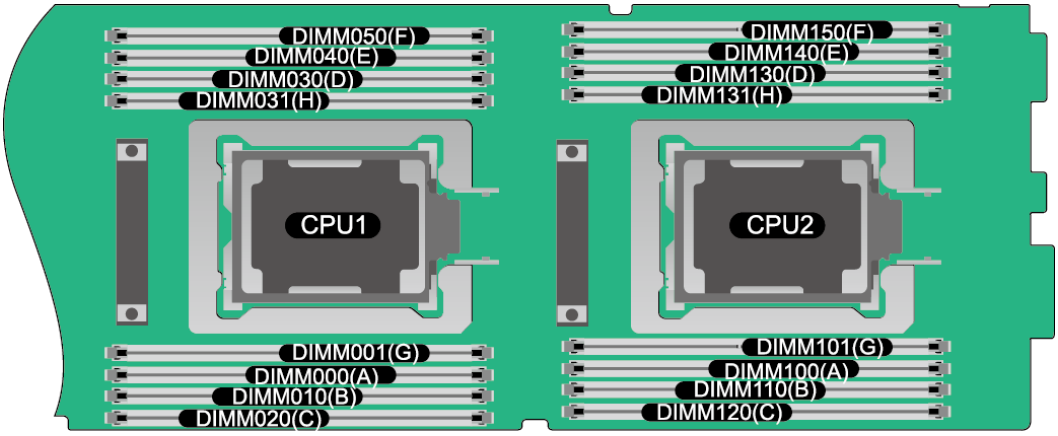

Figure 5-12 DDR4 memory installation guidelines

CPU	Channel	DIMM Slot	Number of DIMMs (✓: recommended ○: not recommended)															
			✓	✓	○	✓	○	✓	○	✓	○	✓	○	✓	○	✓	○	✓
			1	2	3	4	5	6	7	8	9	10	11	12	13	14	15	16
CPU 1	A	DIMM000(A)	●	●	●	●	●	●	●	●	●	●	●	●	●	●	●	●
		DIMM001(G)													●	●	●	●
	B	DIMM010(B)			●	●	●	●	●	●	●	●	●	●	●	●	●	●
	C	DIMM020(C)					●	●			●	●	●	●	●	●	●	●
	D	DIMM030(D)							●	●	●	●	●	●	●	●	●	●
		DIMM031(H)															●	●
	E	DIMM040(E)							●	●	●	●	●	●	●	●	●	●
	F	DIMM050(F)											●	●	●	●	●	●
CPU 2	A	DIMM100(A)		●	●	●	●	●	●	●	●	●	●	●	●	●	●	●
		DIMM101(G)														●	●	●
	B	DIMM110(B)				●	●	●	●	●	●	●	●	●	●	●	●	●
	C	DIMM120(C)						●	●			●	●	●	●	●	●	●
	D	DIMM130(D)								●	●	●	●	●	●	●	●	●
		DIMM131(H)																●
	E	DIMM140(E)								●	●	●	●	●	●	●	●	●
	F	DIMM150(F)												●	●	●	●	●

5.3.1.6 Memory Protection Technologies

The following memory protection technologies are supported:

- ECC
- Full mirroring
- Address range mirroring
- SDDC
- SDDC+1
- Rank sparing mode
- Static virtual lockstep
- Faulty DIMM isolation
- Memory thermal throttling
- Memory address parity protection
- Memory demand/patrol scrubbing
- Device tagging
- Data scrambling
- Adaptive double device data correction (ADDDC)
- ADDDC+1

5.4 Storage

5.4.1 Drive Configuration

Table 5-5 Drive configuration

Specifies the hard drive type.	Maximum Drives	Drive Management Mode
Front Drives[a]	2 • Slots 20, 21 support only SAS/SATA drives.	1 x PCIe RAID controller card/PCH [c] Screw-in RAID controller card: RAID controller card connector installed on the mainboard
M.2 FRU SSD	2 • Slots 0 to 1 support only M.2 FRU SSD	-
2.5/3.5-inch drawer drive [b]	12 • Slots 0 to 11 support only SAS/SATA drives.	1 x PCIe RAID controller card Screw-in RAID controller card: RAID controller card connector installed on the mainboard
Built-in drive	2	PCH

Specifies the hard drive type.	Maximum Drives	Drive Management Mode
	• Slots 0, Slots 1 support only M.2 SSD [d]	

- a: Only 2.5-inch drives fit into the front slots. If the front panel is configured with 2 x HHHL standard PCIe cards, front drive are not supported. When the current PCIe slot is configured with the Avago SAS3004iMR RAID controller card, the Avago SAS3004iMR RAID controller card supports two M.2 SSDs.
- b: The drawer drive supports 2.5-inch and 3.5-inch hard disks
- c: A RAID controller card or PCH can be used to manage common drives. The PCH supports only SATA drives.
- d: The M.2 SSDs come in size 2280, and support the SATA interface.
- Contact your local sales representative or use the Compatibility Checker to determine the components to be used.

5.4.2 Drive Numbering

- Front Drives

Figure 5-13 Drive Numbering (2 x 2.5-inch front drive)

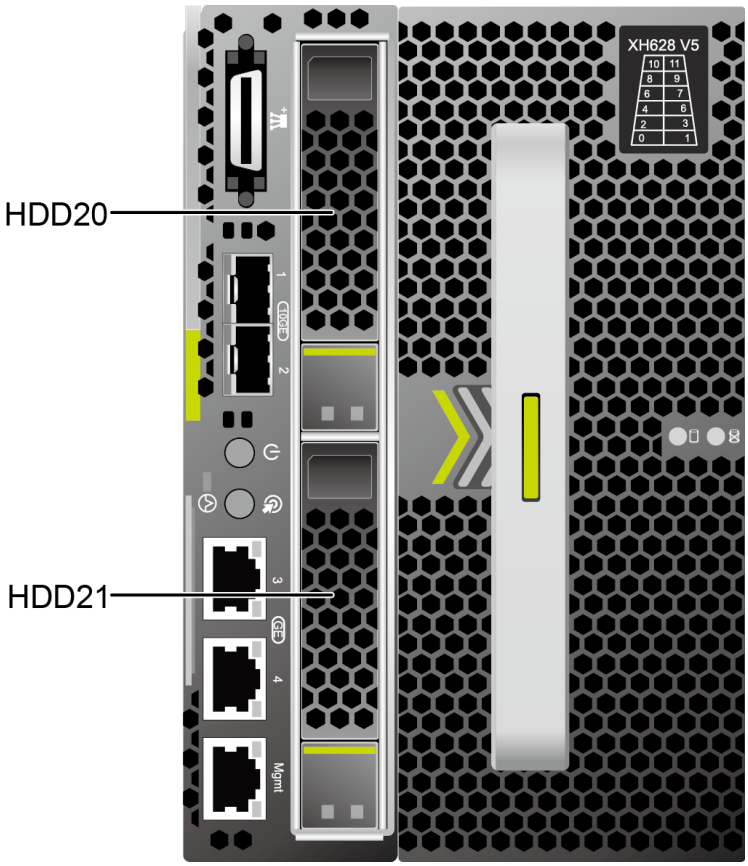

Table 5-6 Mapping between front drive IDs and physical slots displayed in System Event Logs

Front drive number	Physical Slots Displayed in System Event Logs	Front drive number	Physical Slots Displayed in System Event Logs
20	DISK20 (Inner)	21	DISK21 (Inner)

- Drawer drive

Figure 5-14 Drive numbering

Table 5-7 Mapping between drawer drive IDs and physical slots displayed in System Event Logs

Drawer Drive Numbering	Physical Slots Displayed in System Event Logs	Drawer Drive Numbering	Physical Slots Displayed in System Event Logs
0	DISK0 Inner	1	DISK1 Inner
2	DISK2 Inner	3	DISK3 Inner
4	DISK4 Inner	5	DISK5 Inner
6	DISK6 Inner	7	DISK7 Inner
8	DISK8 Inner	9	DISK9 Inner

Drawer Drive Numbering	Physical Slots Displayed in System Event Logs	Drawer Drive Numbering	Physical Slots Displayed in System Event Logs
10	DISK10 Inner	11	DISK11 Inner

- M.2 SSD

Figure 5-15 M.2 SSD number

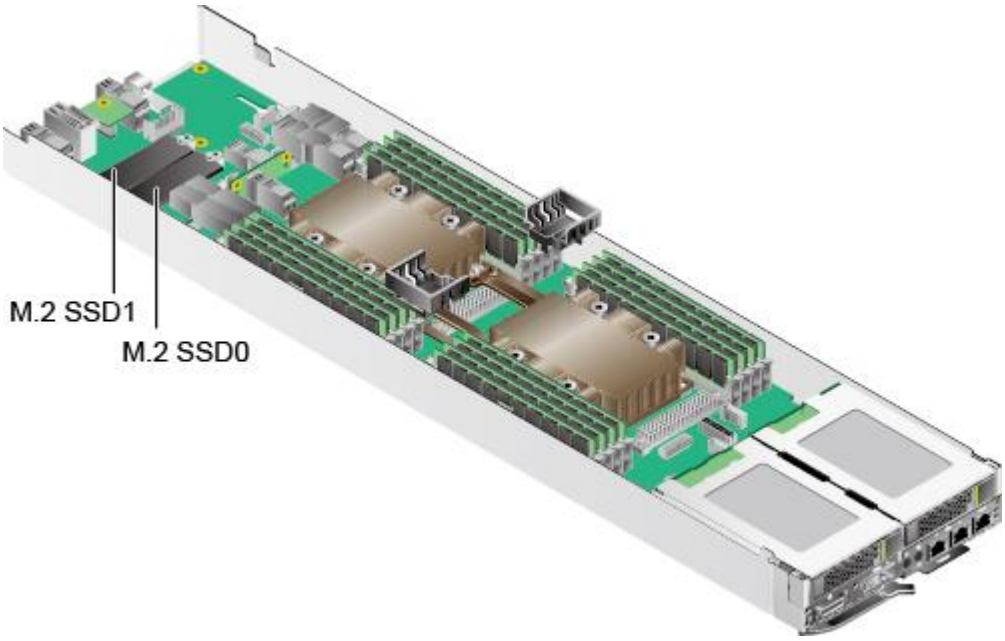

Figure 5-16 M.2 FRU SSD number

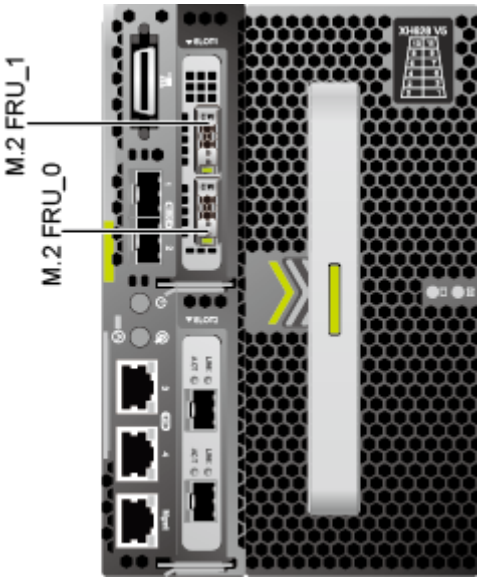

5.4.3 Drive indicators

SAS/SATA Drive Indicator

Figure 5-17 SAS/SATA drive indicator (2 x 2.5-inch front drive)

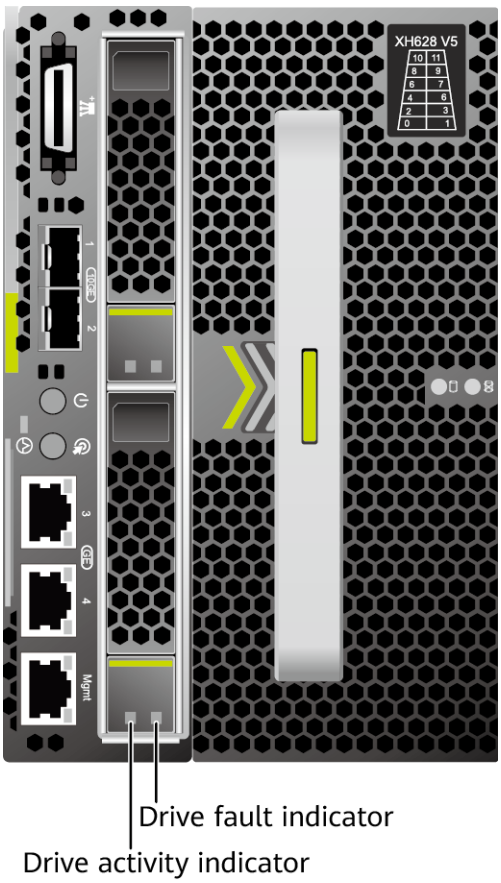

Table 5-8 SAS/SATA drive indicator (2 x 2.5-inch front drive) description

Activity Indicator (Green)	Fault Indicator (Yellow)	Description
Steady on	Off	The drive is detected.
Blinking at 4 Hz	Off	Data is being read or written properly, or data on the primary drive is being rebuilt.
Steady on	Blinking at 1 Hz	The drive is being located.
Blinking at 1 Hz	Blinking at 1 Hz	Data on the secondary drive is being rebuilt.
Off	Steady on	A drive in a RAID array is removed.
Steady on	Steady on	Drive Fault

Drive Drawer Indicator

Figure 5-18 Drive drawer Indicator (example: front 2 x 2.5-inch configuration)

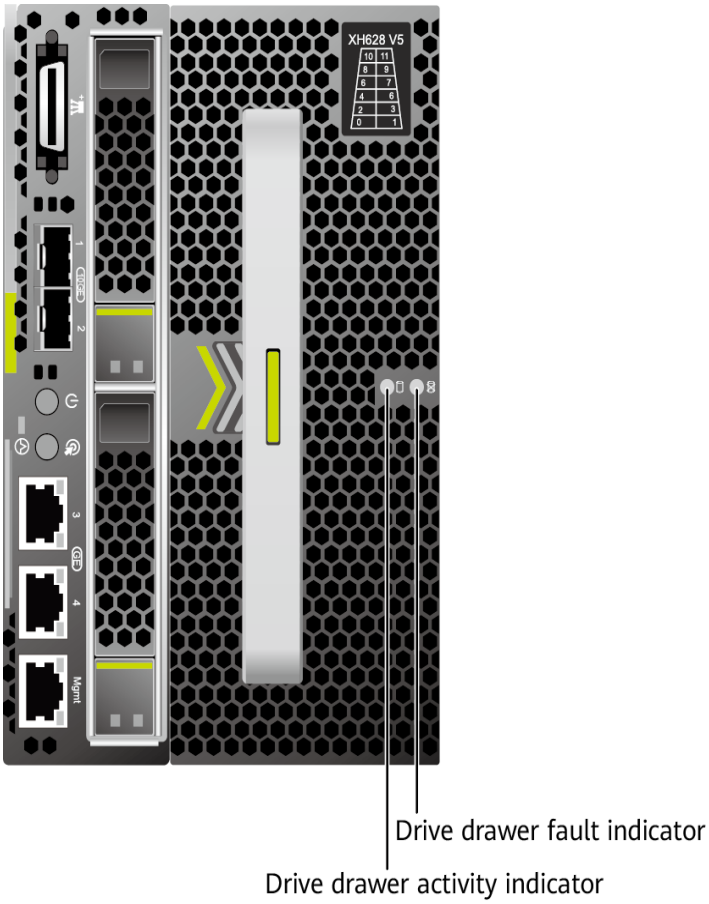

Table 5-9 Drive drawer Indicator (example: front 2 x 2.5-inch configuration)

Drive drawer Active Indicator (green)	Drive drawer Fault Indicator (yellow)	Description
Steady on	Off	A drive is available in the drive drawer and is in the normal state
Blinking at 1 Hz	Blinking at 1 Hz	A drive in the drive drawer is in the RAID reconstruction state.
Off	Steady on	The drive drawer does not detect the drives or has a drive fault.
Off	Off	The drive is not detected in the drive drawer.

M.2 FRU Indicators

Figure 5-19 M.2 FRU indicators

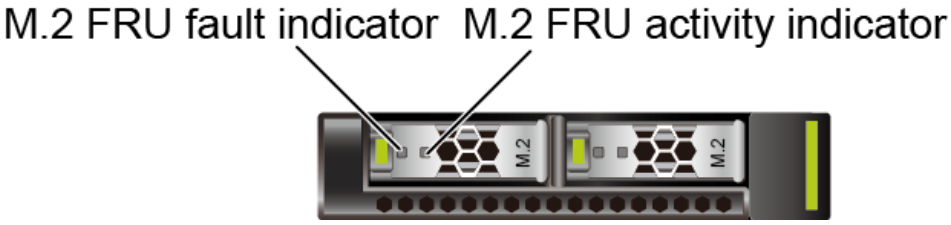

Table 5-10 M.2 FRU indicator description

Indicator	Description
M.2 FRU fault indicator	• Off: The M.2 FRU is running properly. • Blinking yellow: The M.2 FRU is being located, or RAID is being rebuilt. • Steady yellow: The M.2 FRU is faulty or not detected.
M.2 FRU activity indicator	• Off: The M.2 FRU is not in position or is faulty. • Blinking green: Data is being read, written, or synchronized. • Steady green: The M.2 FRU is inactive.

5.4.4 RAID Controller Card

The RAID controller card supports RAID configuration, RAID level migration, and drive roaming.

- Contact your local sales representative or use the Compatibility Checker to determine the components to be used.
- For details about the RAID controller card, see *V5 Server RAID Controller Card User Guide*.

5.5 Network

5.5.1 LOMs

LOMs provide network expansion capabilities.

Table 5-11 LOM description

NIC Type	Chip Model	Port Type	Number of Ports	Rate Negotiation Mode	Supported Rates	Rates Not Supported

NIC Type	Chip Model	Port Type	Number of Ports	Rate Negotiation Mode	Supported Rates	Rates Not Supported
LOMs	X722	10GE optical port	2	Auto-negotiation 10,000 Mbit/s (full duplex)	10,000 Mbit/s	10 Mbit/s, 100 Mbit/s, or 1000 Mbit/s
		GE electrical port	2	Auto-negotiation 1000 Mbit/s (full duplex)	1000 Mbit/s	10 Mbit/s or 100 Mbit/s
• Use Compatibility Checker to obtain information about the cables and optical modules supported by the LOM ports. • The LOM ports do not support forced rates. • The electrical LOM ports cannot be connected to power over Ethernet (PoE) devices (such as a switch with PoE enabled). Connecting a LOM port to a PoE device may cause link communication failure or even damage the NIC. • The electrical LOM ports (GE electrical ports) do not support SR-IOV. • Forcibly powering off a server will cause intermittent NC-SI disconnection and disable the WOL function of the LOM ports. To restore the NC-SI connection, refresh the iBMC WebUI.						

Figure 5-20 LOM port (2 x 2.5" drive configuration)

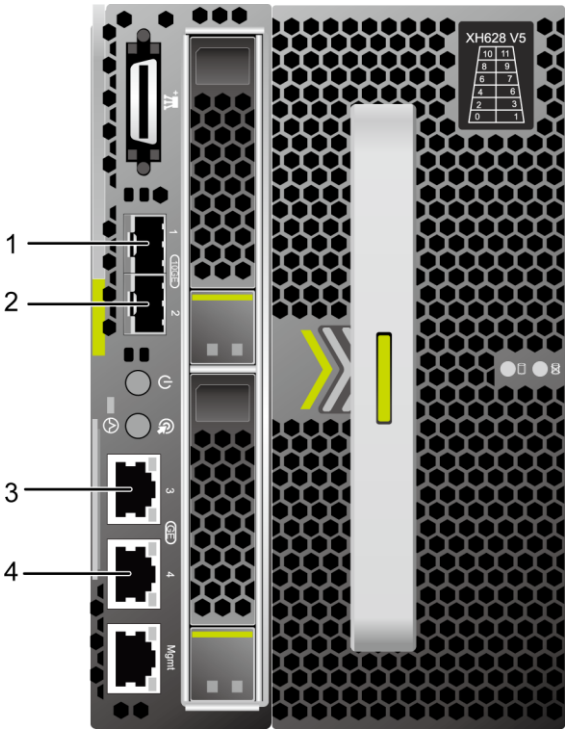

1	10GE optical port (LOM port 1)	2	10GE optical port (LOM port 2)
3	GE electrical port (LOM port 3)	4	GE electrical port (LOM port 4)

Figure 5-21 LOM ports (2 x HHHL PCIe cards)

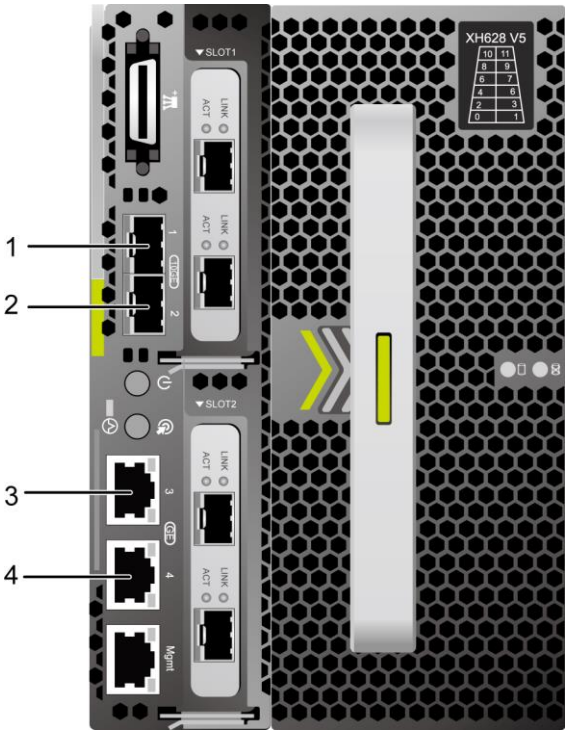

1	10GE optical port (LOM port 1)	2	10GE optical port (LOM port 2)
3	GE electrical port (LOM port 3)	4	GE electrical port (LOM port 4)

Indicator Positions

Figure 5-22 LOM indicators (2 x 2.5" drive configuration)

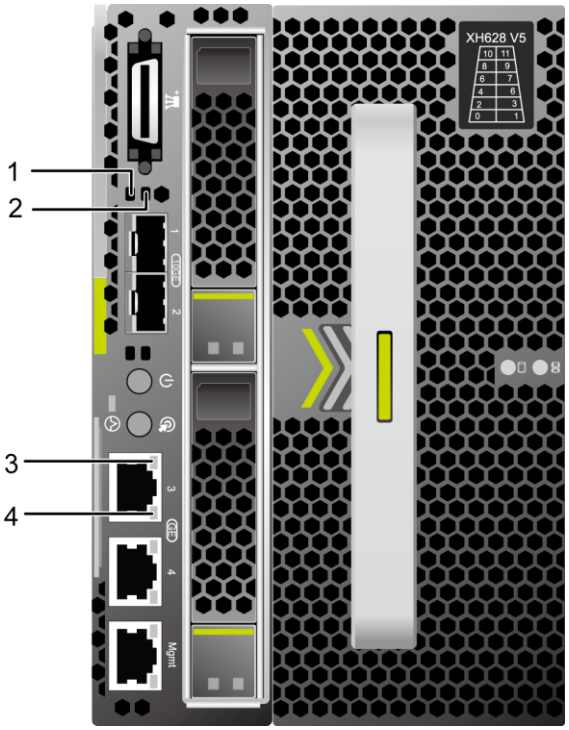

1	Connection status indicator/Data transmission status indicator for a 10GE optical port	2	Data transmission rate indicator for a 10GE optical port
3	GE electrical port transmission status indicator	4	GE electrical port connection status indicator

Figure 5-23 LOM indicators (2 x HHHL PCIe cards)

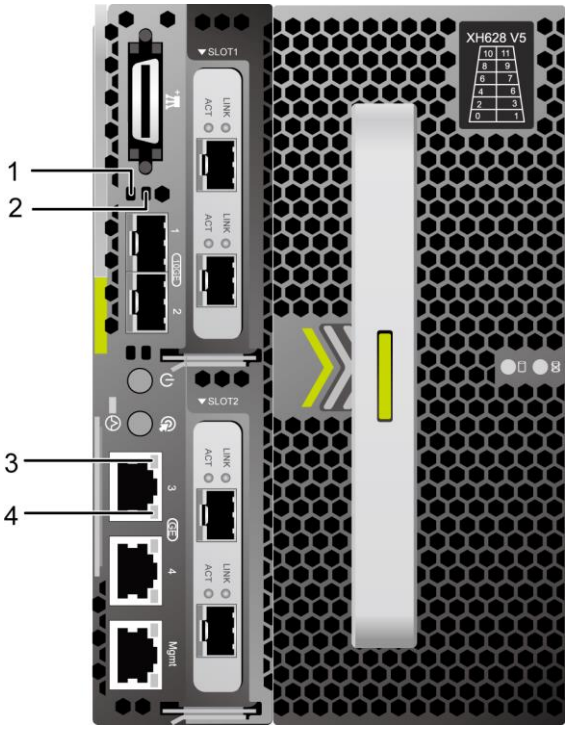

1	Connection status indicator/Data transmission status indicator for a 10GE optical port	2	Data transmission rate indicator for a 10GE optical port
3	GE electrical port transmission status indicator	4	GE electrical port connection status indicator

Indicator Description

Table 5-12 LOM indicators

Indicator	Description
Connection status indicator/Data transmission status indicator for a 10GE optical port	• Off: The network port is not connected. • Blinking green: Data is being transmitted. • Steady green: The network port is properly connected.
Data transmission rate indicator for a 10GE optical port	• Off: The network port is not connected. • Steady green: The data transmission rate is 10 Gbit/s.
GE electrical port connection status	• Off: The network port is not connected.

Indicator	Description
indicator	• Steady green: The network port is properly connected.
GE electrical port transmission status indicator	• Off: Inactive. • Steady yellow: Active, but no data is being transmitted. • Blinking yellow: Data is being transmitted.

5.6 I/O Expansion

5.6.1 PCIe Cards

PCIe cards provide ease of expandability and connection.

- The electrical ports provided by PCIe NICs cannot be connected to power over Ethernet (PoE) devices (such as a switch with PoE enabled). Connecting such an electrical port to a PoE device may cause link communication failure or even damage the NIC.
- Contact your local sales representative or use the Compatibility Checker to determine the components to be used.
- When IB cards are used to build an IB network, ensure that the IPoIB modes of the IB cards at both ends of the network are the same. For details, contact technical support.

5.6.2 PCIe Slots

PCIe Slots

- Front panel

Figure 5-24 PCIe slots (2 standard HHHL PCIe cards)

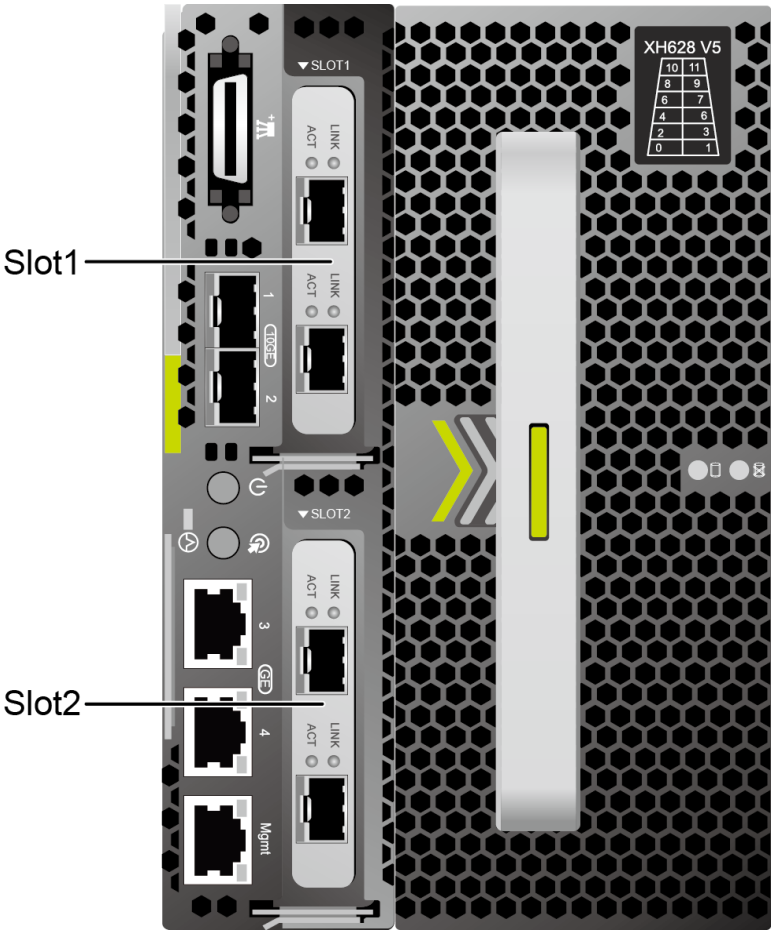

- Rear panel

  Figure 5-25 shows the mapping between PCIe slots and server nodes (7, 5, 3, and 1 from left to right).

Figure 5-25 PCIe slots (rear panel)

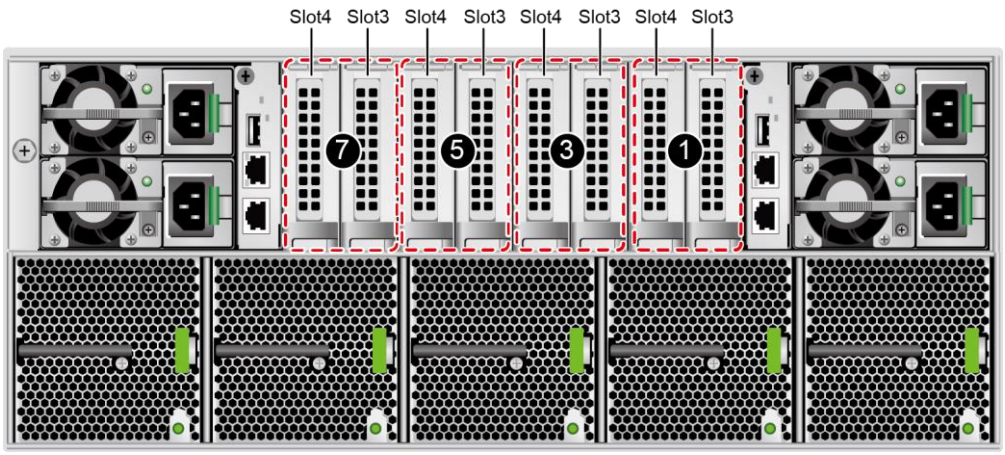

5.6.3 PCIe Slot Description

Table 5-13 PCIe slot description

PCIe Slot	CPU	PCIe Standards	Connector Width	Bus Width	Port No.	B/D/F	Slot Size
RAID controller card	CPU 2	PCIe 3.0	x8	x8	Port1A	85/00/0	-
LOM	CPU 1	PCIe 3.0	x8	x8	Port1A	17/00/0	-
Slot 1	CPU 1	PCIe 3.0	x16	x16	Port3A	5d/00/0	HHHL
Slot 2	CPU 1	PCIe 3.0	x16	x16	Port2A	3a/00/0	HHHL
Slot 3	CPU 2	PCIe 3.0	x8	x8	Port2A	ae/00/0	HHHL
Slot 4	CPU 2	PCIe 3.0	x8	x8	Port2C	ae/02/0	HHHL

- The B/D/F (Bus/Device/Function Number) values are the default values when the server is fully configured with PCIe devices. The values may vary if the server is not fully configured with PCIe devices or if a PCIe card with a PCI bridge is configured.
- The PCIe x16 slots are backward compatible with PCIe x8, PCIe x4, and PCIe x1 cards. The PCIe cards are not forward compatible. That is, the PCIe slot width cannot be smaller than the PCIe card link width.
- If two front 2.5-inch drives are configured, slots 1 and 2 are unavailable.

5.7 Boards

5.7.1 Mainboard

Figure 5-26 XH628 V5 mainboard

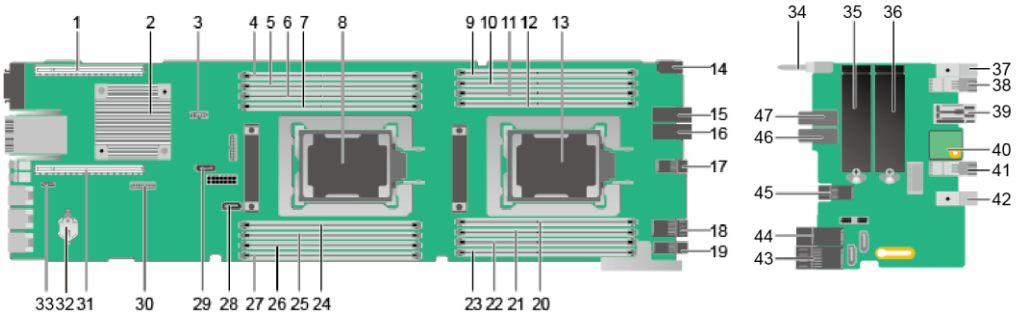

1	PCIe slot 1	2	PCH
3	2.5" drive backplane connector	4	DIMM050 connector
5	DIMM040 connector	6	DIMM030 connector
7	DIMM031 connector	8	CPU 1
9	DIMM150 connector	10	DIMM140 connector
11	DIMM130 connector	12	DIMM131 connector
13	CPU 2	14	Guide sleeve
15	Power connector	16	Power connector
17	Signal connector	18	Signal connector
19	Signal connector	20	DIMM101 connector
21	DIMM100 connector	22	DIMM110 connector
23	DIMM120 connector	24	DIMM001 connector
25	DIMM000 connector	26	DIMM010 connector
27	DIMM020 connector	28	M.2 connector port 0
29	M.2 connector port 1	30	TPM signal connector
31	PCIe slot 2	32	RTC battery
33	SoftRAID key connector[a]	34	Guide pin
35	M.2 SSD 0	36	M.2 SSD 1
37	Guide sleeve	38	Signal connector
39	Power connector	40	TPM

41	Signal connector	42	Guide sleeve
43	Signal connector	44	Signal connector
45	Signal connector	46	Power connector
47	Power connector	-	-
a: The port is reserved.			

6 Product Specifications

6.1 Technical Specifications
6.2 Environmental Specifications
6.3 Physical Specifications

6.1 Technical Specifications

Table 6-1 Technical specifications

Components	Specifications
Form factor	4U4 server node
Chipset	Intel® C622
CPU	Supports two processors. • Intel® Xeon® Scalable (Skylake and Cascade Lake) processors • Built-in memory controller and six memory channels • Built-in PCIe controller, supporting PCIe 3.0 and 48 lanes per processor • Two UPI buses between processors, providing up to 10.4GT/s transmission per channel • Up to 28 cores per processor • Max. 3.8 GHz • Min. 1.375 MB L3 cache per core • Max. 165 W TDP **NOTE** The preceding information is for reference only. Use the Compatibility Checker to obtain specific information.
Memory	Supports 16 memory modules of the following types: • Up to 16 DDR4 memory modules • Max. 2933 MT/s memory speed

Components	Specifications
	• RDIMM and LRDIMM support • The DDR4 memory modules of different types (RDIMM and LRDIMM) and specifications (capacity, bit width, rank, and height) cannot be used together. **NOTE** The preceding information is for reference only. Use the Compatibility Checker to obtain specific information.
Storage	Supports a variety of drive configurations. For details, see 5.4.1 Drive Configuration . • Supports two or four M.2 SSDs. – The PCH supports two M.2 SSDs. If an Avago SAS3004iMR RAID controller card is configured, the Avago SAS3004iMR supports two M.2 SSDs. – When the Avago SAS3004iMR RAID controller card is used with an SR450C-M or SR150-M RAID controller card, the drive letter of the M.2 SSDs managed by the Avago SAS3004iMR RAID controller card cannot be **sda** on the OS. **NOTE** • The M.2 SSD module is used only as the boot device when the OS is installed. Small-capacity (32 GB or 64 GB) M.2 SSDs do not support logging due to poor endurance. If a small-capacity M.2 SSD is used as the boot device, a dedicated log drive or log server is required for logging. For example, you can dump VMware logs in either of the following ways: • Redirect **/scratch**. For details, see https://kb.vmware.com/s/article/1033696. • Configure syslog. For details, see https://kb.vmware.com/s/article/2003322. • The M.2 SSD cannot be used to store data due to poor endurance. In write-intensive applications, the M.2 SSD will wear out in a short time. Use enterprise-level high endurance (HE) SSDs or HDDs for data storage. • The M.2 SSD is not recommended for write-intensive service software due to poor endurance. • Do not use the M.2 SSD as the cache. • Supports hot swap of SAS/SATA drives. • Supports a variety of RAID controller cards. Use the Compatibility Checker to obtain information about the specific RAID controller cards supported. – The RAID controller card supports RAID configuration, RAID level migration, and drive roaming. – The RAID controller card does not occupy a standard PCIe slot. For details about the RAID controller card, see *V5 Server RAID Controller Card User Guide*.

Components	Specifications
Network	Supports LOM. • Supports two 10GE optical ports and two GE electrical ports via the NIC chip integrated on the mainboard. • The LOM ports support NC-SI, WOL, and PXE. **NOTE** • The electrical ports provided by LOMs and PCIe NICs cannot be connected to PoE devices (such as a switch with PoE enabled). Connecting such an electrical port to a PoE device may cause link communication failure or even damage the NIC. • Forcibly powering off a server will cause intermittent NC-SI disconnection and disable the WOL function of the LOM ports. To restore the NC-SI connection, refresh the iBMC WebUI.
I/O expansion	5 PCIe 3.0 slots: • One slot dedicated for a screw-in RAID controller card and four for standard PCIe cards. For details, see 5.6.2 PCIe Slots and 5.6.3 PCIe Slot Description . • Support PCIe SSD cards to bolster I/O performance for applications such as searching, caching, and download services. • When IB cards are used to build an IB network, ensure that the IPoIB modes of the IB cards at both ends of the network are the same. For details, contact technical support. **NOTE** The preceding information is for reference only. Use the Compatibility Checker to obtain specific information.
Ports	Supports a variety of ports. • Ports on the front panel: – One universal connector port – One system management port – Two GE electrical ports – Two 10GE optical ports • Built-in ports: – Two SATADOM ports
Video card	An SM750 video chip with 32 MB display memory is integrated on the mainboard. The maximum display resolution is 1920 x 1200 at 60 Hz with 16 M colors. **NOTE** • SM750 is not supported by servers running the Windows Server 2019 or Windows Server 2019 Hyper-V operating systems that are in secure boot mode. • The integrated video card can provide the maximum display resolution (1920 x 1200) only after the video card driver matching the operating system version is installed. Otherwise, only the default resolution supported by the operating system

Components	Specifications
	is provided.
System management	• Supports UEFI. • Supports iBMC. • Supports NC-SI. • Supports integration with third-party management systems.
Security features	• Power-on password • Administrator password • TPM • Secure boot

6.2 Environmental Specifications

Table 6-2 Environmental specifications

Category	Specifications
Temperature	• Operating temperature: 5°C to 40°C (41°F to 104°F) (ASHRAE Classes A1 to A3 compliant) • Storage temperature (within three months): –30°C to +60°C (–22°F to +140°F) • Storage temperature (within six months): –15°C to +45°C (5°F to 113°F) • Storage temperature (within one year): –10°C to +35°C (14°F to 95°F) • Maximum rate of temperature change: 20°C (36°F) per hour, 5°C (9°F) per 15 minutes **NOTE** • If a single fan faulty, the highest operating temperature is 5°C (41°F) lower than the rated value. • If the Intel® Xeon® Scalable processors (Gold 6144, 6146, 6150 or Platinum 8176, 8170) are used, the highest operating temperature is 35°C (95°F). • The operating temperature specifications vary depending on the processors used: • If the power of the processor is 165 W, the highest ambient temperature supported by the supercapacitor is 33°C (91.4°F). • If the power of the processor is higher than or equal to 150 W and lower than 165 W, the highest ambient temperature supported by the supercapacitor is 35°C (95°F). • If the power of the processor is lower than 150 W, the highest ambient temperature supported by the supercapacitor is 40°C (104°F). • If the server is configured with XH628 V5 and V3 nodes, the

Category	Specifications
	highest operating temperature is subject to the XH628 V5.
Relative humidity (RH, non-condensing)	• Operating humidity: 5% to 85% • Storage humidity (within three months): 8% to 85% • Storage humidity (within six months): 8% to 80% • Storage humidity (within one year): 20% to 75% • Maximum change rate: 20%/h
Operating altitude	≤3050m • When the server configuration complies with ASHRAE Classes A1 and A2 and the altitude is above 900 m (2952.76 ft), the highest operating temperature decreases by 1°C (1.8°F) for every increase of 300 m (984.25 ft). • When the configuration complies with ASHRAE Class A3 standards and the altitude is above 900 m (2952.76 ft.), the highest operating temperature decreases by 1°C (1.8°F) for every increase of 175 m (574.14 ft.). • HDDs cannot be used at an altitude of over 3050 m (10006.44 ft). • Titanium PSUs are required for the altitude higher than 3050 m (10006.44 ft).
Corrosive gaseous contaminant	Maximum corrosion product thickness growth rate: • Copper corrosion rate test: 300 Å/month (meeting level G1 requirements of the ANSI/ISA-71.04-2013 standard on gaseous corrosion) • Silver corrosion rate test: 200 Å/month
Particle contaminant	• The equipment room environment meets the requirements of ISO 14664-1 Class 8. • There is no explosive, conductive, magnetic, or corrosive dust in the equipment room. **NOTE** It is recommended that the particulate pollution in the equipment room be monitored by a professional agency.

NOTE

SSDs and HDDs (including NL-SAS, SAS, and SATA) cannot be preserved for a long time in the power-off state. Data may be lost or faults may occur if the preservation duration exceeds the specified maximum duration. When drives are preserved under the storage temperature and humidity specified in the preceding table, the following preservation time is recommended:

- Maximum preservation duration of SSDs:
- 12 months in power-off state without data stored
- 3 months in power-off state with data stored
- Maximum preservation duration of HDDs:
- 6 months in unpacked/packed and powered-off state

- The maximum preservation duration is determined according to the preservation specifications provided by drive vendors. For details, see the manuals provided by drive vendors.

6.3 Physical Specifications

Table 6-3 Physical specifications

Item	Description
Dimensions (H x W x D)	166 mm x 109 mm x 745 mm (6.54 in. x 4.29 in. x 29.33 in.) **Figure 6-1** Physical dimensions 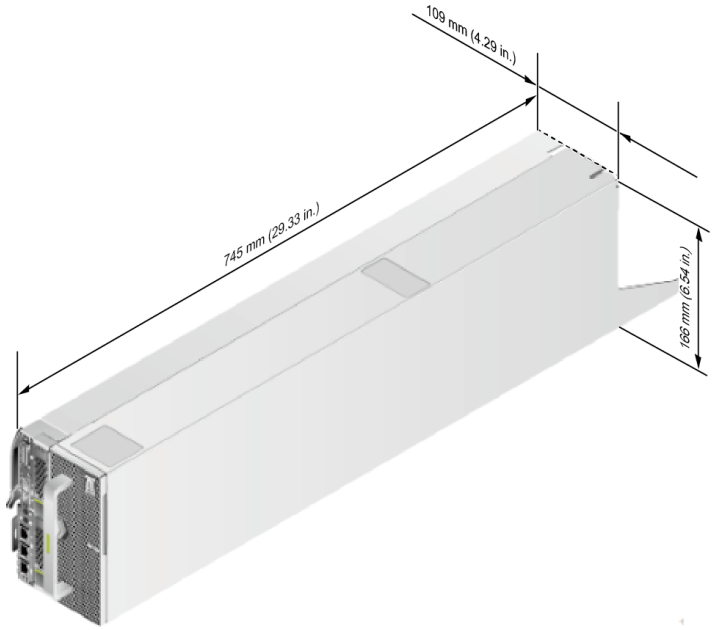 **NOTE** See Figure 6-1 for methods in measuring physical dimensions of the server node.
Fully equipped weight	• Net weight: 20 kg (44.09 lb) • Packaging material weight: 4.35 kg (9.59 lb)
Energy consumption	The power consumption parameters vary with server configurations, including the configurations complying with energy-related products (ErP) requirements. Use the Power Calculator to obtain specific information.

7 Software and Hardware Compatibility

Use the Compatibility Checker to obtain information about the operating systems and hardware supported.

NOTICE

- If incompatible components are used, the device may be abnormal. This fault is beyond the scope of technical support and warranty.
- The performance of servers is closely related to application software, basic middleware software, and hardware. The slight differences of the application software, middleware basic software, and hardware may cause performance inconsistency between the application layer and test software layer.
- If the customer has requirements on the performance of specific application software, contact sales personnel to apply for POC tests in the pre-sales phase to determine detailed software and hardware configurations.
- If the customer has requirements on hardware performance consistency, specify the specific configuration requirements (for example, specific drive models, RAID controller cards, or firmware versions) in the pre-sales phase.

8 Safety Instructions

8.1 Security

8.2 Maintenance and Warranty

8.1 Security

General Statement

- Comply with local laws and regulations when installing devices. These Safety Instructions are only a supplement.
- The "DANGER", "WARNING", and "CAUTION" information in this document does not represent all the safety instructions, but supplements to the safety instructions.
- Observe all safety instructions provided on the device labels when installing hardware. Follow them in conjunction with these Safety Instructions.
- Only qualified personnel are allowed to perform special tasks, such as performing high-voltage operations and driving a forklift.

WARNING

If this device works in a residential environment, the wireless interference may be generated.

Human Safety

- This equipment is not suitable for use in places where children may be present.
- Only certified or authorized personnel are allowed to install the device.
- Discontinue any dangerous operations and take protective measures. Report anything that could cause personal injury or device damage to a project supervisor.
- Do not move devices or install racks and power cables in hazardous weather conditions.

- Do not carry the weight that is over the maximum load per person allowed by local laws or regulations. Before moving or installing equipment, check the maximum equipment weight and arrange required personnel.
- Wear clean protective gloves, ESD clothing, a protective hat, and protective shoes, as shown in Figure 8-1.

Figure 8-1 Safety work wear

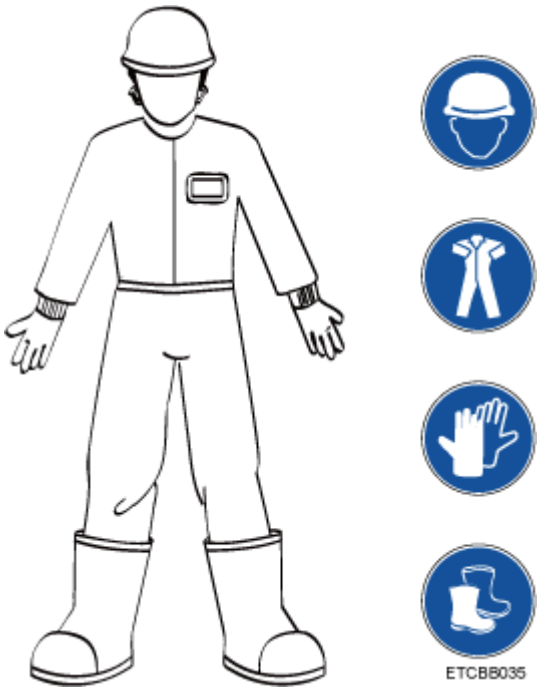

- Before touching a device, wear ESD clothing and gloves (or wrist strap), and remove any conductive objects (such as watches and jewelry). Figure 8-2 shows conductive objects that must be removed before you touch a device.

Figure 8-2 Removing conductive objects

Figure 8-3 shows how to wear an ESD wrist strap.

a. Put your hands into the ESD wrist strap.

b. Tighten the strap buckle and ensure that the ESD wrist strap is in contact with your skin.

c. Insert the ground terminal attached to the ESD wrist strap into the jack on the grounded rack or chassis.

Figure 8-3 Wearing an ESD wrist strap

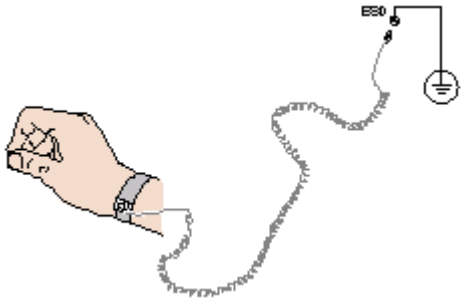

- Exercise caution when using tools.
- If the installation position of the device is higher than the shoulders of the installation personnel, use a vehicle such as a lift to facilitate installation. Prevent the equipment from falling down and causing personal injury or damage to the equipment.
- The equipment is powered by high-voltage power sources. Direct or indirect contact (especially through damp objects) with high-voltage power sources may result in serious injury or death.
- Ground the equipment before powering it on. Otherwise, personal injury may be caused by high electricity leakage.
- When a ladder is used, ensure that another person holds the ladder steady to prevent accidents.
- When connecting, testing, or replacing an optical cable, do not look into the optical port without eye protection.

Equipment Safety

- Use the recommended power cables at all times.
- Use power cables only for dedicated servers. Do not use them for other devices.
- Before operating equipment, wear ESD clothes and gloves to prevent electrostatic-sensitive devices from being damaged by ESD.
- When moving a device, hold the bottom of the device. Do not hold the handles of the installed modules, such as the PSUs, fan modules, drives, and the mainboard. Handle the equipment with care.
- Exercise caution when using tools that could cause personal injury.
- If the device is configured with active and standby PSUs, connect power cables of active and standby PSUs to different power distribution units (PDUs) to ensure reliable system operating.
- Ground the equipment before powering it on.

Transportation Precautions

Improper transportation may damage equipment. Contact the manufacturer for precautions before attempting transportation.

Transportation precautions include but are not limited to:

- The logistics company engaged to transport the device must be reliable and comply with international standards for transporting electronics. Ensure that the

equipment being transported is always kept upright. Take necessary precautions to prevent collisions, corrosion, package damage, damp conditions and pollution.

- Transport the equipment in its original packaging.
- If the original packaging is unavailable, package heavy, bulky parts (such as chassis and blades) and fragile parts (such as PCIe GPUs and SSDs) separately.

NOTE

Use Compatibility Checker to obtain information abut the components supported by a node or server.

- Power off all devices before transportation.

Maximum Weight Carried by a Person

CAUTION

To reduce the risk of personal injury, comply with local regulations with regard to the maximum weight one person is permitted to carry.

Table 8-1 lists the maximum weight one person is permitted to carry as stipulated by a number of organizations.

Table 8-1 Maximum weight carried per person

Organization	Weight (kg/lb)
European Committee for Standardization (CEN)	25/55.13
International Organization for Standardization (ISO)	25/55.13
National Institute for Occupational Safety and Health (NIOSH)	23/50.72
Health and Safety Executive (HSE)	25/55.13

For more information about safety instructions, see *Server Safety Information*.

8.2 Maintenance and Warranty

For details about the maintenance policy, visit Customer Support Service.

For details about the warranty policy, visit Warranty.

9 System Management

The server uses the next-generation Intelligent Baseboard Management Controller (iBMC) to implement remote server management. The iBMC complies with IPMI 2.0 and provides highly reliable hardware monitoring and management.

Features

The iBMC supports the following features and protocols:

- KVM and text console redirection
- Remote virtual media
- IPMI
- SNMP
- Common information model (CIM)
- Redfish
- Browser-based login

Specifications

Table 9-1 iBMC specifications

Specifications	Description
Management interface	Integrates with any standard management system through the following interfaces: • IPMI • CLI • HTTPS • SNMP • Redfish
Fault Detection	Detects and accurately locates faults in a field replaceable unit (FRU).
System watchdog	Supports BIOS POST, OS watchdog, and automatic system reset after fault timeout. Users can enable or disable these features individually.

Specifications	Description
Setting of boot device	Supports out-of-band configuration for the boot device.
Alarm management	Supports alarm management and reports alarms using the SNMP trap, SMTP, and syslog service to ensure 24/7 operating.
Integrated virtual KVM	Provides remote maintenance measures and VNC service for troubleshooting.
Integrated virtual media	Virtualizes local media devices, images, USB keys, and folders into media devices on a remote server, simplifying OS installation. (The virtual DVD-ROM drive supports a maximum transmission rate of 8 MB/s.)
WebUI	Provides a user-friendly graphical user interface (GUI), which simplifies users' configuration and query operations.
Fault reproduction	Reproduces faults to facilitate fault diagnosis.
Screen snapshots and videos	Allows users to view screenshots and videos without login, facilitating routine preventive maintenance inspection (PMI).
Black Box	Allows users to enable or disable the black box function and download black box data.
DNS/LDAP	Supports domain management and directory services, which significantly simplify network and configuration management.
Dual-image backup	Allows a boot from the backup image when the active software crashes.
Device asset management	Provides intelligent asset management, supporting unified management and stocktaking of assets in use.
Intelligent power management	Uses the power capping technology to increase deployment density, and uses dynamic energy saving to lower operating expenses.
IPv6	Supports IPv6 to help build an all-IPv6 environment.
Network Controller Sideband Interface (NC-SI)	Supports NC-SI, allowing access to the iBMC through the service network port.

A Appendix

A.1 Node Label

Figure A-1 Position of the XH628 V5 label

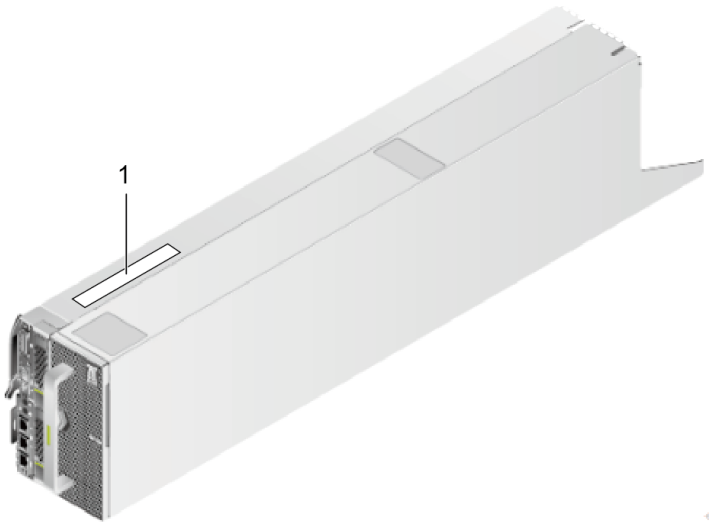

Table A-1 XH628 V5 Label description

No.	Description
1	Serial number of the server node. For details, see A.2 Product SN.

A.2 Product SN

The serial number (SN) on the slide-out label plate uniquely identifies a device. The SN is required when you contact technical support.

Figure A-2 Example SN

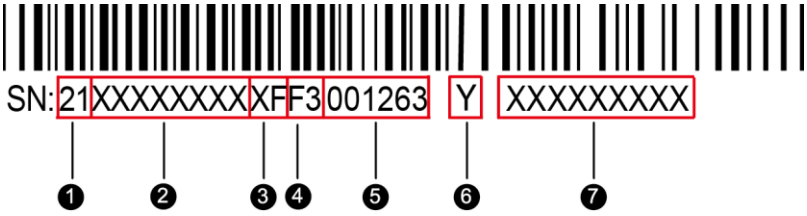

Table A-2 SN description

No.	Description
1	ESN ID (two characters), which can only be **21**.
2	Material ID (eight characters), that is, the processing code.
3	Vendor code (two characters), that is, the code of the processing place.
4	Year and month (two characters). • The first character indicates the year. – Digits 1 to 9 indicate years 2001 to 2009, respectively. – Letters A to H indicate years 2010 to 2017, respectively. – Letters J to N indicate years 2018 to 2022, respectively. – Letters P to Y indicate years 2023 to 2032, respectively. **NOTE** The years from 2010 are represented by upper-case letters excluding I, O, and Z because the three letters are similar to the digits 1, 0, and 2. • The second character indicates the month. – Digits 1 to 9 indicate January to September, respectively. – Letters A to C indicate October to December, respectively.
5	Serial number (six digits).
6	RoHS compliance (one character). **Y** indicates RoHS compliant.
7	Internal model (product name) of the board.

A.3 RAS Features

The server supports a variety of Reliability, Availability, and Serviceability (RAS) features. You can configure these features for better performance.

For details about how to configure these features, see the *Server Purley Platform BIOS Parameter Reference*.

Table A-3 Supported RAS features

Module	Feature	Description

Module	Feature	Description
CPU	Corrected Machine Check Interrupt (CMCI)	Corrects error-triggered interrupts.
Memory	Failed DIMM Isolation	Identifies faulty DIMMs to facilitate isolation and replacement of the faulty DIMMs.
	Memory Thermal Throttling	Automatically adjusts the memory temperature to prevent the memory from being damaged due to overheat.
	Rank Sparing	Uses some memory ranks for backup to prevent the system from breaking down due to uncorrectable errors.
	Memory Address Parity Protection	Detects memory command and address errors.
	Memory Demand and Patrol Scrubbing	Corrects correctable errors upon detection. If these errors are not corrected in a timely manner, uncorrectable errors may occur.
	Memory Mirroring	Provides high reliability for the system via mirroring.
	Single Device Data Correction (SDDC)	Corrects single-chip multi-bit errors to improve memory reliability.
	Device Tagging	Degrades and rectifies memory faults to improve memory availability.
	Data Scrambling	Optimizes data flow distribution to reduce the error probability and improve memory data flow reliability and address error detection.
PCIe	PCIe Advanced Error Reporting	Provides a PCIe advanced error reporting mechanism to improve server serviceability.
UPI	Intel UPI Link Level Retry	Provides a retry mechanism to improve the reliability of UPI links.
	Intel UPI Protocol Protection via CRC	Provides cyclic redundancy check (CRC) protection for UPI data packets to improve system reliability.
System	Core Disable For FRB (Fault Resilient Boot)	Isolates a faulty CPU core during startup to improve system reliability and availability.
	Corrupt Data Containment Mode	Marks the memory storage unit when a data error occurs to limit the impact on the running program and improve system reliability.

Module	Feature	Description
	Socket disable for FRB (Fault Resilient Boot)	Isolates a faulty socket during the BIOS startup process to improve system reliability.
	Architected Error Records	With the features such as eMCA, the BIOS collects error information recorded in hardware registers in compliance with UEFI specifications, notifies the OS through the APEI interface of the ACPI, and locates the error unit, improving system availability.
	Error Injection Support	Implements fault injection to verify RAS features.
	Machine Check Architecture (MCA)	Provides a software repair function to rectify uncorrectable errors to improve system availability.
	Enhanced Machine Check Architecture (eMCA): Gen2	Improves system availability.
	OOB access to MCA registers	The out-of-band system can access MCA registers through the PECI. When a fatal error occurs in the system, the out-of-band system can collect onsite data to facilitate subsequent fault analysis and locating and improve system serviceability.
	BIOS Abstraction Layer for Error Handling	The BIOS processes errors and reports error information to the OS based on specifications, improving system serviceability.
	BIOS-based Predictive Failure Analysis (PFA)	The OS takes the lead. The BIOS provides information about physical memory error units. The OS tracks, predicts, and handles the errors.

A.4 Sensor List

Sensor	Description	Component
Inlet Temp	Air inlet temperature on the management board	Right mounting ear
Outlet Temp	Air outlet temperature	Mainboard
Raid BBU Temp	RAID controller card capacitor temperature	RAID controller card
RAID Card BBU	BBU of the screw-in RAID	RAID controller card

Sensor	Description	Component
	controller card	
PCH Temp	PCH bridge temperature	Mainboard
CPU1 Core Rem	CPU core temperature	CPU 1
CPU2 Core Rem	CPU core temperature	CPU 2
CPU1 DTS	CPU DTS value	CPU 1
CPU2 DTS	CPU DTS value	CPU 2
CPU1 Margin	CPU Margin	CPU 1
CPU2 Margin	CPU Margin	CPU 2
CPU1 Prochot	CPU Prochot	CPU 1
CPU2 Prochot	CPU Prochot	CPU 2
CPU1 VDDQ Temp	CPU VDDQ temperature	Mainboard
CPU2 VDDQ Temp	CPU VDDQ temperature	Mainboard
CPU1 VRD Temp	CPU VRD temperature	Mainboard
CPU2 VRD Temp	CPU VRD temperature	Mainboard
CPU1 MEM Temp	CPU DIMM temperature	DIMMs of CPU 1
CPU2 MEM Temp	CPU DIMM temperature	DIMMs of CPU 2
CPU1 DDR VPP1	VPP_ABC voltage	Mainboard
CPU1 DDR VPP2	VPP_DEF voltage	Mainboard
CPU2 DDR VPP1	VPP_GHJ voltage	Mainboard
CPU2 DDR VPP2	VPP_KLM voltage	Mainboard
CPU1 VSA	CPU 1 VSA voltage	Mainboard
CPU2 VSA	CPU 2 VSA voltage	Mainboard
CPU1 VCCIO	CPU 1 VCCIO voltage	Mainboard *1* indicates the CPU number.
CPU2 VCCIO	CPU 2 VCCIO voltage	Mainboard *2* indicates the CPU number.
PCH VPVNN	PCH VPVNN voltage	Mainboard
PCH PRIM 1V05	PCH PRIM voltage	Mainboard
SYS 3.3V	Mainboard 3.3 V voltage	Mainboard
SYS 5V	Mainboard 5 V voltage	Mainboard

Sensor	Description	Component
SYS 12V_1	Mainboard 12 V voltage	Mainboard
SYS 12V_2	Mainboard 12 V voltage	Mainboard
CPU1 VCore	1.8 V CPU voltage	Mainboard
CPU2 VCore	1.8 V CPU voltage	Mainboard
CPU1 DDR VDDQ	1.2 V DIMM voltage	Mainboard
CPU1 DDR VDDQ2	1.2 V DIMM voltage	Mainboard
CPU2 DDR VDDQ	1.2 V DIMM voltage	Mainboard
CPU2 DDR VDDQ2	1.2 V DIMM voltage	Mainboard
MOS Volt Drop	MOS transistor voltage drop of the mainboard soft-start circuit	Mainboard
RAID Temp	Temperature of the RAID controller card	RAID controller card
Disks Temp	Maximum drive temperature	Drive
Power	Board power	Mainboard
FAN1 F Speed	Fan speed	Fan module *1* *1* indicates the fan module number.
FAN1 R Speed	Fan speed	Fan module *1* *1* indicates the fan module number.
FAN2 F Speed	Fan speed	Fan module *2* *2* indicates the fan module number.
FAN2 R Speed	Fan speed	Fan module *2* *2* indicates the fan module number.
FAN3 F Speed	Fan speed	Fan module *3* *3* indicates the fan module number.
FAN3 R Speed	Fan speed	Fan module *3* *3* indicates the fan module number.
FAN4 F Speed	Fan speed	Fan module *4* *4* indicates the fan module number.

Sensor	Description	Component
FAN4 R Speed	Fan speed	Fan module *4* *4* indicates the fan module number.
FAN5 F Speed	Fan speed	Fan module *5* *5* indicates the fan module number.
FAN5 R Speed	Fan speed	Fan module *5* *5* indicates the fan module number.
Power1	PSU 1 input power	PSU *1* *1* indicates the PSU number.
Power2	PSU 2 input power	PSU *2* *2* indicates the PSU number.
Power3	PSU 3 input power	PSU *3* *3* indicates the PSU number.
Power4	PSU 4 input power	PSU *4* *4* indicates the PSU number.
CPU Usage	CPU usage	N/A
Memory Usage	Memory usage	N/A
CPU1 Status	CPU status detection	CPU *1* *1* indicates the CPU number.
CPU2 Status	CPU status detection	CPU *2* *2* indicates the CPU number.
CPU1 Memory	DIMM status	DIMMs of the CPU *1* indicates the DIMM number.
CPU2 Memory	DIMM status	DIMMs of the CPU *2* indicates the DIMM number.
PwrOk Sig. Drop	Voltage drop status	N/A
PS1 Presence	PSU presence status	PSU *1* indicates the PSU number.

Sensor	Description	Component
PS1 Status	PSU fault status	PSU *1* indicates the PSU number.
PS2 Presence	PSU presence status	PSU *2* indicates the PSU number.
PS2 Status	PSU fault status	PSU *2* indicates the PSU number.
PS3 Presence	PSU presence status	PSU *3* indicates the PSU number.
PS3 Status	PSU fault status	PSU *3* indicates the PSU number.
PS4 Presence	PSU presence status	PSU *4* indicates the PSU number.
PS4 Status	PSU fault status	PSU *4* indicates the PSU number.
PS1 Fan Status	PSU fan fault status	PSU *1* indicates the PSU number.
PS2 Fan Status	PSU fan fault status	PSU *2* indicates the PSU number.
PS3 Fan Status	PSU fan fault status	PSU *3* indicates the PSU number.
PS4 Fan Status	PSU fan fault status	PSU *4* indicates the PSU number.
ACPI State	ACPI status	N/A
SysFWProgress	Software processes and system startup errors	N/A
Power Button	Power button pressed status	Right mounting ear
SysRestart	System restart causes	N/A

Sensor	Description	Component
Boot Error	Boot error	N/A
Watchdog2	Watchdog	N/A
Mngmnt Health	Management subsystem health status	N/A
DISK0 Inner	Drive status	Drive
DISK1 Inner	Drive status	Drive
DISK2 Inner	Drive status	Drive
DISK3 Inner	Drive status	Drive
DISK4 Inner	Drive status	Drive
DISK5 Inner	Drive status	Drive
DISK6 Inner	Drive status	Drive
DISK7 Inner	Drive status	Drive
DISK8 Inner	Drive status	Drive
DISK9 Inner	Drive status	Drive
DISK10 Inner	Drive status	Drive
DISK11 Inner	Drive status	Drive
DISK20 Inner	Drive status	Drive
DISK21 Inner	Drive status	Drive
DISK20	Drive status	Drive
DISK21	Drive status	Drive
FAN1 F Presence	Fan presence	Fan module *1* *1* indicates the fan module number.
FAN1 R Presence	Fan presence	Fan module *1* *1* indicates the fan module number.
FAN2 F Presence	Fan presence	Fan module *2* *2* indicates the fan module number.
FAN2 R Presence	Fan presence	Fan module *2* *2* indicates the fan module number.
FAN3 F Presence	Fan presence	Fan module *3* *3* indicates the fan module

Sensor	Description	Component
		number.
FAN3 R Presence	Fan presence	Fan module *3* *3* indicates the fan module number.
FAN4 F Presence	Fan presence	Fan module *4* *4* indicates the fan module number.
FAN4 R Presence	Fan presence	Fan module *4* *4* indicates the fan module number.
FAN5 F Presence	Fan presence	Fan module *5* *5* indicates the fan module number.
FAN5 R Presence	Fan presence	Fan module *5* *5* indicates the fan module number.
FAN1 F Status	Fan fault status	Fan module *1* *1* indicates the fan module number.
FAN1 R Status	Fan fault status	Fan module *1* *1* indicates the fan module number.
FAN2 F Status	Fan fault status	Fan module *2* *2* indicates the fan module number.
FAN2 R Status	Fan fault status	Fan module *2* *2* indicates the fan module number.
FAN3 F Status	Fan fault status	Fan module *3* *3* indicates the fan module number.
FAN3 R Status	Fan fault status	Fan module *3* *3* indicates the fan module number.
FAN4 F Status	Fan fault status	Fan module *4* *4* indicates the fan module number.
FAN4 R Status	Fan fault status	Fan module *4* *4* indicates the fan module

Sensor	Description	Component
		number.
FAN5 F Status	Fan fault status	Fan module *5* *5* indicates the fan module number.
FAN5 R Status	Fan fault status	Fan module *5* *5* indicates the fan module number.
UID Button	UID button status	Indicator board on the front panel
RAID controller card	RAID controller card	RAID controller card
RAID Presence	RAID controller card presence	RAID controller card
Riser1 Card	Hardware presence	Riser card 1
Riser2 Card	Hardware presence	Riser card 2
RTC Battery	RTC battery status. An alarm is generated when the voltage is lower than 1 V.	RTC battery on the mainboard
SAS Cable	Hardware presence	Mainboard
PS Cable	PSU backplane signal cable presence	PSU backplane
FAN Backplane	Fan backplane signal cable presence	Fan board
ChassisMgmtCable	Aggregation network port backplane signal cable presence	Convergence network port backplane
DIMM000	DIMM status	DIMM *000* indicates the DIMM slot number.
DIMM001	DIMM status	DIMM *001* indicates the DIMM slot number.
DIMM010	DIMM status	DIMM *010* indicates the DIMM slot number.
DIMM020	DIMM status	DIMM *020* indicates the DIMM slot number.
DIMM030	DIMM status	DIMM

Sensor	Description	Component
		030 indicates the DIMM slot number.
DIMM031	DIMM status	DIMM *031* indicates the DIMM slot number.
DIMM040	DIMM status	DIMM *040* indicates the DIMM slot number.
DIMM050	DIMM status	DIMM *050* indicates the DIMM slot number.
DIMM100	DIMM status	DIMM *100* indicates the DIMM slot number.
DIMM101	DIMM status	DIMM *101* indicates the DIMM slot number.
DIMM110	DIMM status	DIMM *110* indicates the DIMM slot number.
DIMM120	DIMM status	DIMM *120* indicates the DIMM slot number.
DIMM130	DIMM status	DIMM *130* indicates the DIMM slot number.
DIMM131	DIMM status	DIMM *131* indicates the DIMM slot number.
DIMM140	DIMM status	DIMM *140* indicates the DIMM slot number.
DIMM150	DIMM status	DIMM *150* indicates the DIMM slot number.
PCIE Status	Incorrect PCIe status	PCIe device
PwrOn TimeOut	Power-on timeout	Mainboard
PwrCap Status	Power capping status	Mainboard

Sensor	Description	Component
HDD Backplane	Hardware presence	Drive backplane
Front HDD BP	Hardware presence	Drive backplane
Port# Link Down	Network port link status	Mainboard
Eth Heartbeat	Heartbeat status	Mainboard
RAID PCIE ERR	RAID controller card fault diagnosis health status	RAID controller card
PS Redundancy	Redundancy failure due to PSU removal	Mainboard
System Notice	Hot restart reminder and fault diagnosis program information collection	Management board and switch module
System Error	System suspension or restart. Check the background logs.	N/A
PCH Status	PCH chip fault diagnosis health status	Mainboard
CPU1 UPI Link	CPU QPI link fault diagnosis health status	Mainboard
CPU2 UPI Link	CPU QPI link fault diagnosis health status	Mainboard
IB$ Temp	IB NIC temperature	IB NIC
M.2 Zone Temp	Temperature sensor at M.2 SSD slot zone	M.2 drive
Retimer Temp	Temperature sensor at Retimer zone	Retimer card
MOS Temp	Temperature sensor at MOS zone on the horizontal adapter	Mainboard
HDDBkp9 Temp	Temperature sensor at drive 9 on the 10-drive HDD backplane	Drive backplane
HDDBkp11 Temp	Temperature sensor at drive 11 on the 10-drive HDD backplane	Drive backplane

B Glossary

B.1 A-E

E

ejector lever	A part on the panel of a device used to facilitate installation or removal of the device.
Ethernet	A baseband local area network (LAN) architecture developed by Xerox Corporation by partnering with Intel and DEC. Ethernet uses the Carrier Sense Multiple Access/Collision Detection (CSMA/CD) access method and allows data transfer over various cables at 10 Mbit/s. The Ethernet specification is the basis for the IEEE 802.3 standard.

B.2 F-J

G

Gigabit Ethernet (GE)	An extension and enhancement of traditional shared media Ethernet standards. It is compatible with 10M and 100M Ethernet and complies with IEEE 802.3z standards.

H

hot swap	Replacing or adding components without stopping or shutting down the system.

B.3 K-O

K

KVM	A hardware device that provides public keyboard, video and mouse (KVM).

B.4 P-T

P

panel	An external component (including but not limited to ejector levers, indicators, and ports) on the front or rear of the server. It seals the front and rear of the chassis to ensure optimal ventilation and electromagnetic compatibility (EMC).
Peripheral Component Interconnect Express (PCIe)	A computer bus PCI, which uses the existing PCI programming concepts and communication standards, but builds a faster serial communication system. Intel is the main sponsor for PCIe. PCIe is used only for internal interconnection. A PCI system can be transformed to a PCIe one by modifying the physical layer instead of software. PCIe delivers a faster speed and can replace almost all AGP and PCI buses.

R

redundancy	A mechanism that allows a backup device to automatically take over services from a faulty device to ensure uninterrupted running of the system.
redundant array of independent disks (RAID)	A storage technology that combines multiple physical drives into a logical unit for the purposes of data redundancy and performance improvement.

S

server	A special computer that provides services for clients over a network.
system event log (SEL)	Event records stored in the system used for subsequent fault diagnosis and system recovery.

B.5 U-Z

U

U	A unit defined in International Electrotechnical Commission (IEC) 60297-1 to measure the height of a cabinet or chassis. 1 U = 44.45 mm
UltraPath Interconnect (UPI)	A point-to-point processor interconnect developed by Intel.

C Acronyms and Abbreviations

C.1 A-E

A

AC	alternating current
AES	Advanced Encryption Standard New Instruction Set
ARP	Address Resolution Protocol
AVX	Advanced Vector Extensions

B

BBU	backup battery unit
BIOS	Basic Input/Output System

C

CD	calendar day
CE	Conformite Europeenne
CIM	Common Information Model
CLI	command-line interface

D

DC	direct current
DCPMM	DC persistent memory module

DDR3	Double Data Rate 3
DDR4	Double Data Rate 4
DDDC	double device data correction
DEMT	Dynamic Energy Management Technology
DIMM	dual in-line memory module
DRAM	dynamic random-access memory
DVD	digital video disc

E

ECC	error checking and correcting
ECMA	European Computer Manufacturer Association
EDB	Execute Disable Bit
EN	European Efficiency
ERP	enterprise resource planning
ETS	European Telecommunication Standards

C.2 F-J

F

FB-DIMM	Fully Buffered DIMM
FC	Fiber Channel
FCC	Federal Communications Commission
FCoE	Fibre Channel over Ethernet
FTP	File Transfer Protocol

G

GE	Gigabit Ethernet
GPIO	General Purpose Input/Output
GPU	graphics processing unit

H

HA	high availability
HDD	hard disk drive
HPC	high-performance computing
HTTP	Hypertext Transfer Protocol
HTTPS	Hypertext Transfer Protocol Secure

I

iBMC	intelligent baseboard management controller
IC	Industry Canada
ICMP	Internet Control Message Protocol
IDC	Internet Data Center
IEC	International Electrotechnical Commission
IEEE	Institute of Electrical and Electronics Engineers
IGMP	Internet Group Message Protocol
IOPS	input/output operations per second
IP	Internet Protocol
IPC	intelligent power capability
IPMB	Intelligent Platform Management Bus
IPMI	Intelligent Platform Management Interface

C.3 K-O

K

KVM	keyboard, video, and mouse

L

LC	Lucent connector
LRDIMM	load-reduced dual in-line memory module
LED	light emitting diode

LOM	LAN on motherboard

M

MAC	media access control
MMC	module management controller

N

NBD	next business day
NC-SI	Network Controller Sideband Interface

C.4 P-T

P

PCIe	Peripheral Component Interconnect Express
PDU	power distribution unit
PHY	physical layer
PMBUS	power management bus
POK	power OK
PWM	pulse-width modulation
PXE	Preboot Execution Environment

Q

QPI	Quick Path Interconnect

R

RAID	redundant array of independent disks
RAS	reliability, availability and serviceability
RDIMM	registered dual in-line memory module
REACH	Registration Evaluation and Authorization of Chemicals

RJ45	registered jack 45
RoHS	Restriction of the Use of Certain Hazardous Substances in Electrical and Electronic Equipment

S

SAS	Serial Attached Small Computer System Interface
SATA	Serial Advanced Technology Attachment
SCM	supply chain management
SDDC	single device data correction
SERDES	serializer/deserializer
SGMII	serial gigabit media independent interface
SMI	serial management interface
SMTP	Simple Mail Transfer Protocol
SNMP	Simple Network Management Protocol
SOL	serial over LAN
SONCAP	Standards Organization of Nigeria-Conformity Assessment Program
SSD	solid-state drive
SSE	Streaming SIMD Extensions

T

TACH	tachometer signal
TBT	Turbo Boost Technology
TCG	Trusted Computing Group
TCM	trusted cryptography module
TCO	total cost of ownership
TDP	thermal design power
TELNET	Telecommunication Network Protocol
TET	Trusted Execution Technology
TFM	TransFlash module
TFTP	Trivial File Transfer Protocol

TOE	TCP offload engine
TPM	trusted platform module

C.5 U-Z

U

UDIMM	unbuffered dual in-line memory module
UEFI	Unified Extensible Firmware Interface
UID	unit identification light
UL	Underwriter Laboratories Inc.
USB	Universal Serial Bus

V

VCCI	Voluntary Control Council for Interference by Information Technology Equipment
VGA	Video Graphics Array
VLAN	virtual local area network
VRD	voltage regulator-down

W

WEEE	waste electrical and electronic equipment
WSMAN	Web Service Management