FusionServer G5500 V7 Server

Technical White Paper

Issue	02
Date	2023-12-13

xFusion Digital Technologies Co., Ltd.

Copyright © xFusion Digital Technologies Co., Ltd. 2023. All rights reserved.

No part of this document may be reproduced or transmitted in any form or by any means without prior written consent of xFusion Digital Technologies Co., Ltd.

Trademarks and Permissions

xFUSION and other xFusion trademarks are trademarks of xFusion Digital Technologies Co., Ltd. All other trademarks and trade names mentioned in this document are the property of their respective holders.

Notice

In this document, "xFusion" is used to refer to "xFusion Digital Technologies Co., Ltd." for concise description and easy understanding, which does not mean that "xFusion" may have any other meaning. Any "xFusion" mentioned or described hereof may not be understood as any meaning other than "xFusion Digital Technologies Co., Ltd.", and xFusion Digital Technologies Co., Ltd. shall not bear any liability resulting from the use of "xFusion".

The purchased products, services and features are stipulated by the contract made between xFusion and the customer. All or part of the products, services and features described in this document may not be within the purchase scope or the usage scope. Unless otherwise specified in the contract, all statements, information, and recommendations in this document are provided "AS IS" without warranties, guarantees or representations of any kind, either express or implied.

The information in this document is subject to change without notice. Every effort has been made in the preparation of this document to ensure accuracy of the contents, but all statements, information, and recommendations in this document do not constitute a warranty of any kind, express or implied.

xFusion Digital Technologies Co., Ltd.

Address: 9th Floor, Building 1, Zensun Boya Square, Longzihu Wisdom Island
Zhengdong New District 450046
Zhengzhou, Henan Province
People's Republic of China

Website: https://www.xfusion.com

About This Document

Overview

This document describes the appearance, features, performance parameters, and hardware and software compatibility of FusionServer G5500 V7, so that users can have an in-depth and detailed understanding of FusionServer G5500 V7.

Intended Audience

This document is intended for presales engineers.

Symbol Conventions

The symbols that may be found in this document are defined as follows.

Symbol	Description
DANGER	Indicates a hazard with a high level of risk which, if not avoided, will result in death or serious injury.
WARNING	Indicates a hazard with a medium level of risk which, if not avoided, could result in death or serious injury.
CAUTION	Indicates a hazard with a low level of risk which, if not avoided, could result in minor or moderate injury.
NOTICE	Indicates a potentially hazardous situation which, if not avoided, could result in equipment damage, data loss, performance deterioration, or unanticipated results. NOTICE is used to address practices not related to personal injury.
NOTE	Supplements the important information in the main text. NOTE is used to address information not related to personal injury, equipment damage, and environment deterioration.

 Copyright © xFusion Digital Technologies Co., Ltd.

Change History

Issue	Date	Description
02	2023-12-13	● Added **11 Waste Product Recycling**. ● Updated **10 Certifications**. ● Updated **A.4 Nameplate**.
01	2023-10-09	This issue is the first official release.

Copyright © xFusion Digital Technologies Co., Ltd.

Contents

About This Document.....ii

1 Product Overview..... 1

2 Features.....2

3 Physical Structure..... 5

4 Logical Structure..... 7

5 Hardware Description.....11

5.1 Front Panel.....11
5.1.1 Appearance.....11
5.1.2 Indicators and Buttons..... 12
5.1.3 Ports.....15
5.2 Rear Panel..... 18
5.2.1 Appearance.....18
5.2.2 Indicators and Buttons..... 19
5.2.3 Ports.....21
5.3 Processors.....22
5.4 Memory.....23
5.4.1 DDR5 Memory.....23
5.4.1.1 Memory Identifier.....23
5.4.1.2 Memory Subsystem Architecture.....24
5.4.1.3 Memory Compatibility..... 26
5.4.1.4 DIMM Installation Rules.....27
5.4.1.5 Positions of Memory Modules.....27
5.4.1.6 Memory Protection Technologies.....29
5.5 Storage..... 30
5.5.1 Drive Configuration and Drive Numbering..... 30
5.5.1.1 24 x 3.5" Drive Configuration.....31
5.5.1.2 20 x 2.5" Drive Configuration.....35
5.5.2 Drive Indicators.....37
5.5.3 RAID Controller Card.....39
5.6 Network.....39
5.6.1 OCP 3.0 NICs..... 39

 Copyright © xFusion Digital Technologies Co., Ltd.

5.7 I/O Expansion.....39
5.7.1 PCIe Cards.....39
5.7.2 PCIe Slots.....40
5.7.3 PCIe Slot Description.....43
5.8 PSUs.....49
5.9 Fan Modules.....50
5.10 Boards.....50
5.10.1 Mainboard.....51
5.10.2 Drive Backplane.....53
5.10.3 Fan Board.....55
5.10.4 PSU Backplane.....56
5.10.5 PCIe Switch Board.....57
5.10.6 PCIe Pass-Through Board.....59
5.10.7 M.2 SSD Adapter Board.....60

6 Product Specifications.....61
6.1 Technical Specifications.....61
6.2 Environmental Specifications.....66
6.3 Physical Specifications.....68

7 Software and Hardware Compatibility.....70

8 Safety Instructions.....71
8.1 Security.....71
8.2 Maintenance and Warranty.....74

9 System Management.....76

10 Certifications.....78

11 Waste Product Recycling.....79

A Appendix.....80
A.1 Chassis Label Information.....80
A.1.1 Chassis Head Label.....80
A.1.1.1 Nameplate.....81
A.1.1.2 Certificate.....82
A.1.1.3 Quick Access Label.....83
A.1.2 Chassis Internal Label.....84
A.1.3 Chassis Tail Label.....85
A.2 SN.....85
A.3 Operating Temperature Limitations.....87
A.4 Nameplate.....88
A.5 RAS Features.....88
A.6 Sensor List.....88
A.7 FAQs About Optical Modules.....94

 Copyright © xFusion Digital Technologies Co., Ltd.

B Glossary.....97
B.1 A-E.....97
B.2 F-J.....98
B.3 K-O.....98
B.4 P-T.....98
B.5 U-Z.....100
C Acronyms and Abbreviations.....101
C.1 A-E.....101
C.2 F-J.....102
C.3 K-O.....104
C.4 P-T.....104
C.5 U-Z.....106

 Copyright © xFusion Digital Technologies Co., Ltd.

1 Product Overview

The FusionServer G5500 V7 server (G5500 V7 for short) is a heterogeneous computing server that is optimized in HPC as well as data training and inference for deep learning for scenarios such as AI, HPC, cloud computing, and big data analytics. It supports multiple types of heterogeneous processors and applies to both enterprise and public cloud deployments.

The G5500 V7 is a 4U GPU server that features supreme computing performance, flexible scalability, and balanced storage.

NOTE

For details about the G5500 V7 nameplate, see **A.4 Nameplate**.

Figure 1-1 G5500 V7 with 24 x 3.5" drives

 Copyright © xFusion Digital Technologies Co., Ltd.

2 Features

Performance

- New-generation of Intel® Xeon® Scalable processors (Sapphire Rapids) are configured. Each processor provides up to 60 cores and 120 threads, up to 350 W TDP per processor, a maximum of 4.1 GHz turbo frequency, 2 MB L2 cache and 1.875 MB L3 cache per core, and four groups of 16 GT/s UPI interconnect links between the processors, delivering supreme processing performance.
- A maximum of 32 x DDR5 4800 MT/s registered dual in-line memory modules (RDIMMs) deliver up to 8192 GB total memory capacity (calculated using the maximum capacity of a single memory module: 128 GB). The memory modules feature high speed and availability.

Scalability

- Flexible drive configurations cater to a variety of business requirements and ensure high elasticity and scalability of storage resources.
- Supports a maximum of 24 x 3.5" SAS/SATA front drive slots, eight of which can host 3.5" NVMe drives.
- Supports a maximum of 12 x 2.5" NVMe drives and 8 x 2.5" SAS/SATA drives.
- Supports a maximum of 14 x PCIe x16 standard expansion slots, 10 of which support FHFL dual-width GPUs and four of which support HHHL NICs.
- Supports three OCP 3.0 NICs, one of which supports upgradable PCIe 5.0 x16 bandwidth. GE/10GE/25GE/100GE NICs can be configured flexibly. OCP 1/OCP 3 supports orderly hot swap.

  NOTE

  The hot swap of the OCP NIC depends on the OS driver. Ensure that the system enters the OS state and the OCP hot swap-related drivers have been loaded.
- Two M.2 modules can be configured.

Availability and Serviceability

- Carrier-class components with process expertise ensure high system reliability.
- The server supports hot-swappable SAS/SATA drives. SAS/SATA drives support RAID 0, 1, 1E, 10, 5, 50, 6, and 60, depending on the RAID controller card used. It also uses a supercapacitor to protect the RAID cache data against power failures.

 Copyright © xFusion Digital Technologies Co., Ltd.

- The RAID controller card supports Intel VROC (VMD NVMe RAID) for RAID management of NVMe drives. Different VROC keys can be configured to support multiple RAID levels.
- The server provides simplified O&M and efficient troubleshooting through the UID/HLY indicators on the front panel, fault diagnosis LED, and iBMC WebUI.
- The panel provides the iBMC direct connect management port to support local iBMC O&M, improving O&M efficiency.
- The server provides four hot-swappable PSUs in 2+2 or 3+1 redundancy mode and six or eight hot-swappable fan modules in N+1 redundancy mode, improving system availability.
- The onboard Intelligent Baseboard Management Controller (iBMC) can continuously monitor system parameters, trigger alarms, and take recovery measures to minimize shutdown.
- For more information about the warranty in the Chinese market, see **Warranty**.

Manageability and Security

- The built-in iBMC monitors system operating status and provides remote management.
- A password is required for accessing the BIOS, ensuring system boot and management security.
- The Network Controller Sideband Interface (NC-SI) feature allows a network port to simultaneously serve as a management port and a service port. The NC-SI feature is disabled by default and can be enabled or disabled on the iBMC or BIOS.

  NOTE

  The service port with NC-SI enabled supports the following configuration:

  - Configuring any network port on the OCP 3.0 NIC or PCIe NIC (with NC-SI enabled).
  - If the standard PCIe card supports the NC-SI function, it can be installed in slot 18 only.
  - Enabling, disabling, and setting a virtual local area network (VLAN) ID for this port. The VLAN ID is **0** and disabled by default.
  - Configuring IPv4 addresses (IPv4 address, subnet mask, and default gateway) and IPv6 addresses (IPv6 address, prefix length) for this port.
- The integrated Unified Extensible Firmware Interface (UEFI) improves setup, configuration, and update efficiency and simplifies fault clearance.
- The lockable server chassis panel ensures local data security.
- Chassis cover opening detection is supported to enhance physical security.
- Intel Execute Disable Bit (EDB) function prevents certain types of malicious buffer overflow attacks when working with a supported OS.
- Intel® Trusted Execution Technology prevents malicious software attacks based on hardware, prevents the firmware on the device from being maliciously modified, and prevents unauthorized boot block execution.
- Intel® Software Guard Extensions (SGX) technology allows applications to run in their own independent space without being affected by other software running in the system, thereby enhancing security.

 Copyright © xFusion Digital Technologies Co., Ltd.

- The secure boot based on the chip root of trust (RoT) implements level-by-level verification starting from the hardware RoT and builds a complete secure boot chain.
- The trusted platform module (TPM) and trusted cryptography module (TCM) provide advanced encryption functions, such as digital signatures and remote authentication.
- The following requirements in NIST SP 800-147B are met:
  - The BIOS firmware digital signature update mechanism is supported. During the upgrade, the digital signature is verified to prevent unauthorized BIOS firmware upgrade.
  - The flash security protection mechanism is supported to prevent unauthorized modification of the flash memory in the OS.

Energy Efficiency

- The server supports 80 PLUS Platinum/Titanium PSUs of different energy efficiency levels. The PSU efficiency reaches 96% at 50% load.
- Active/standby power supply and HVDC power supply are supported, improving the efficiency of the power supply system.
- Efficient voltage regulator-down (VRD) power supplies for boards minimize the energy loss from DC-to-DC power conversion.
- Area-based Proportional-Integral-Derivative (PID) intelligent fan speed adjustment and intelligent CPU frequency scaling optimize heat dissipation and reduce overall system power consumption.
- The improved thermal design with energy-efficient fans ensures optimal heat dissipation and reduces system power consumption.
- The server is protected with power capping and power control measures.
- Staggered spinup of drives reduces the server boot power consumption.

 Copyright © xFusion Digital Technologies Co., Ltd.

3 Physical Structure

Figure 3-1 Physical structure of a server with 24 x 3.5" drives (example)

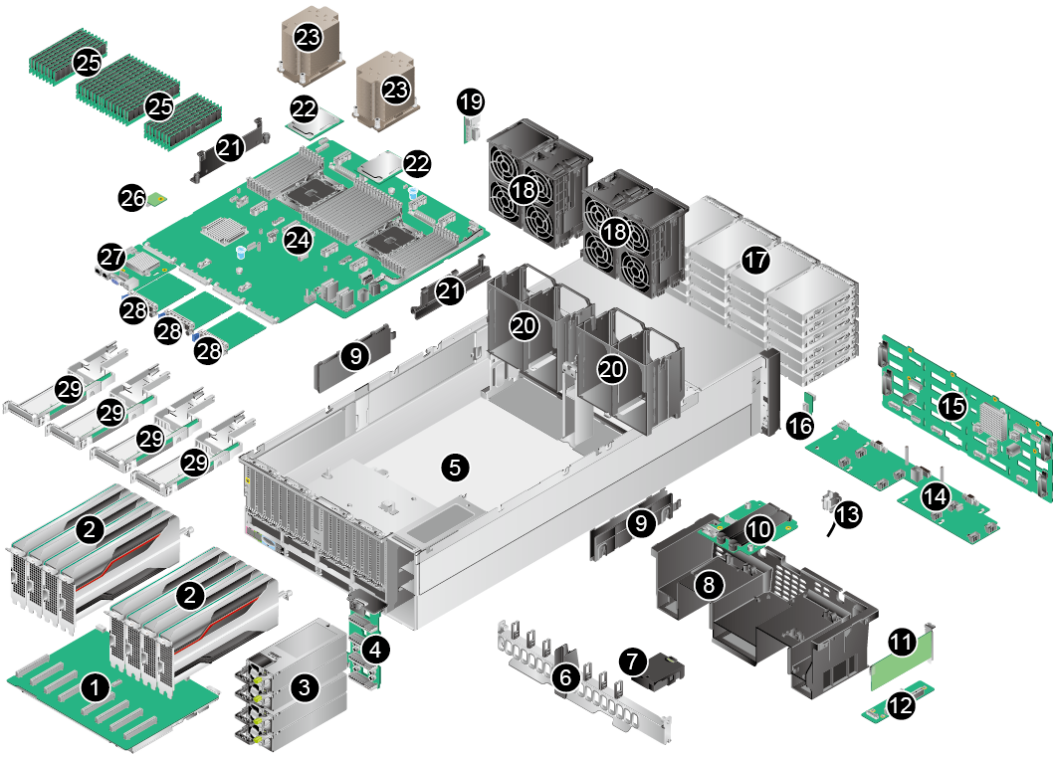

1	PCIe switch board	2	GPU
3	PSUs	4	Power adapter board
5	Chassis	6	GPU beam
7	Supercapacitor	8	Air duct
9	Cable management arm (CMA)	10	M.2 SSD
11	PCIe plug-in RAID controller card	12	Riser card of a PCIe plug-in RAID controller card

 Copyright © xFusion Digital Technologies Co., Ltd.

13	Intrusion sensor	14	Fan board
15	24 x 3.5" drive backplane	16	Left mounting ear plate
17	3.5" drives	18	Fan modules
19	Right mounting ear plate	20	Fan module frame
21	Cable management arm (CMA)	22	CPU
23	CPU heat sinks	24	Mainboard
25	Memory modules	26	TPM/TCM
27	BMC card	28	OCP cards
29	NIC riser modules	-	-

 Copyright © xFusion Digital Technologies Co., Ltd.

4 Logical Structure

 Copyright © xFusion Digital Technologies Co., Ltd.

Figure 4-1 Logical structure 1 (configuration with 24 x 3.5" drives + 8 x dual-width GPUs + 1 x PCIe switch board)

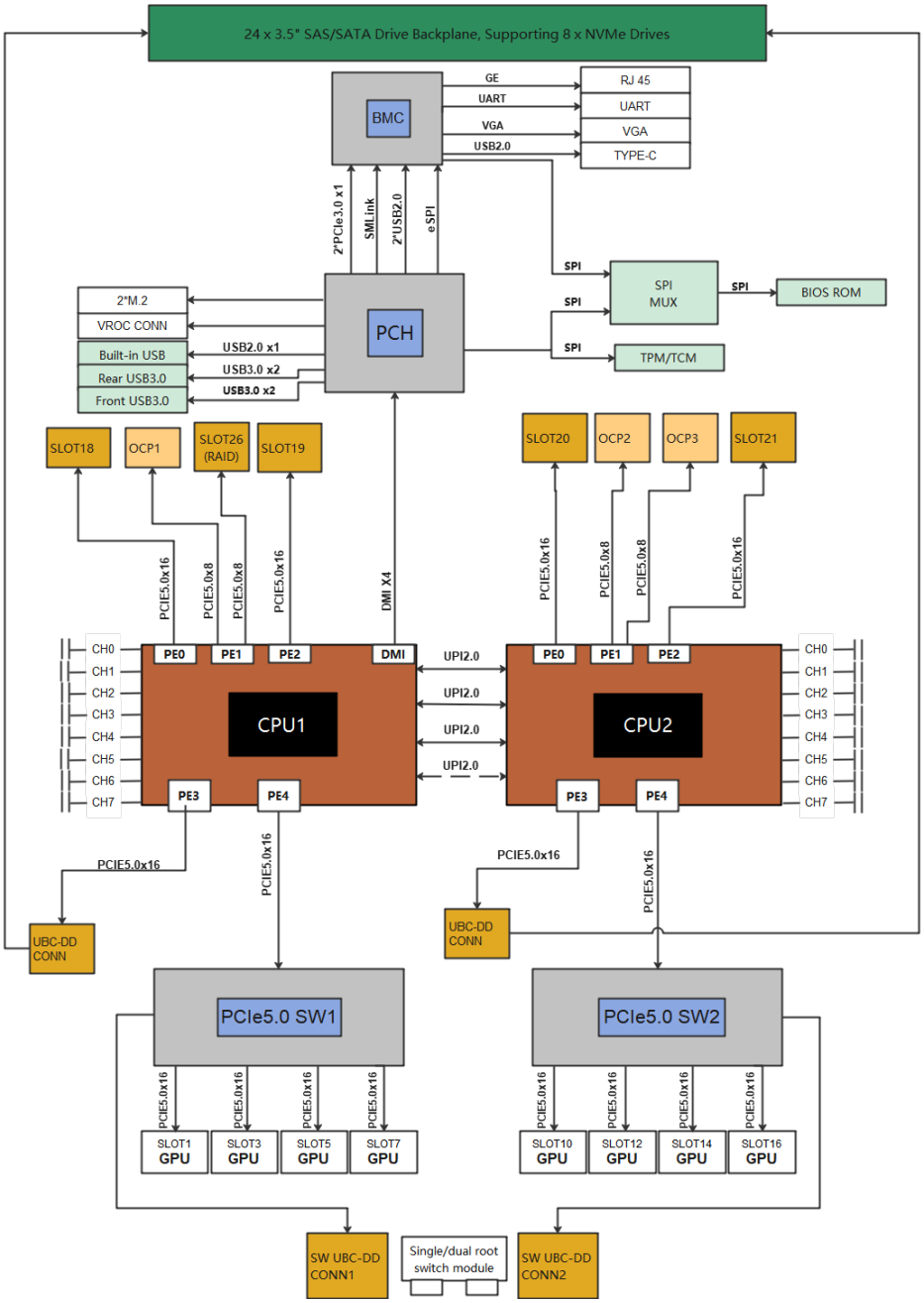

Figure 4-2 Logical structure 2 (configuration with 20 x 2.5" drives + 10 x dual-width GPUs + 1 x PCIe switch board)

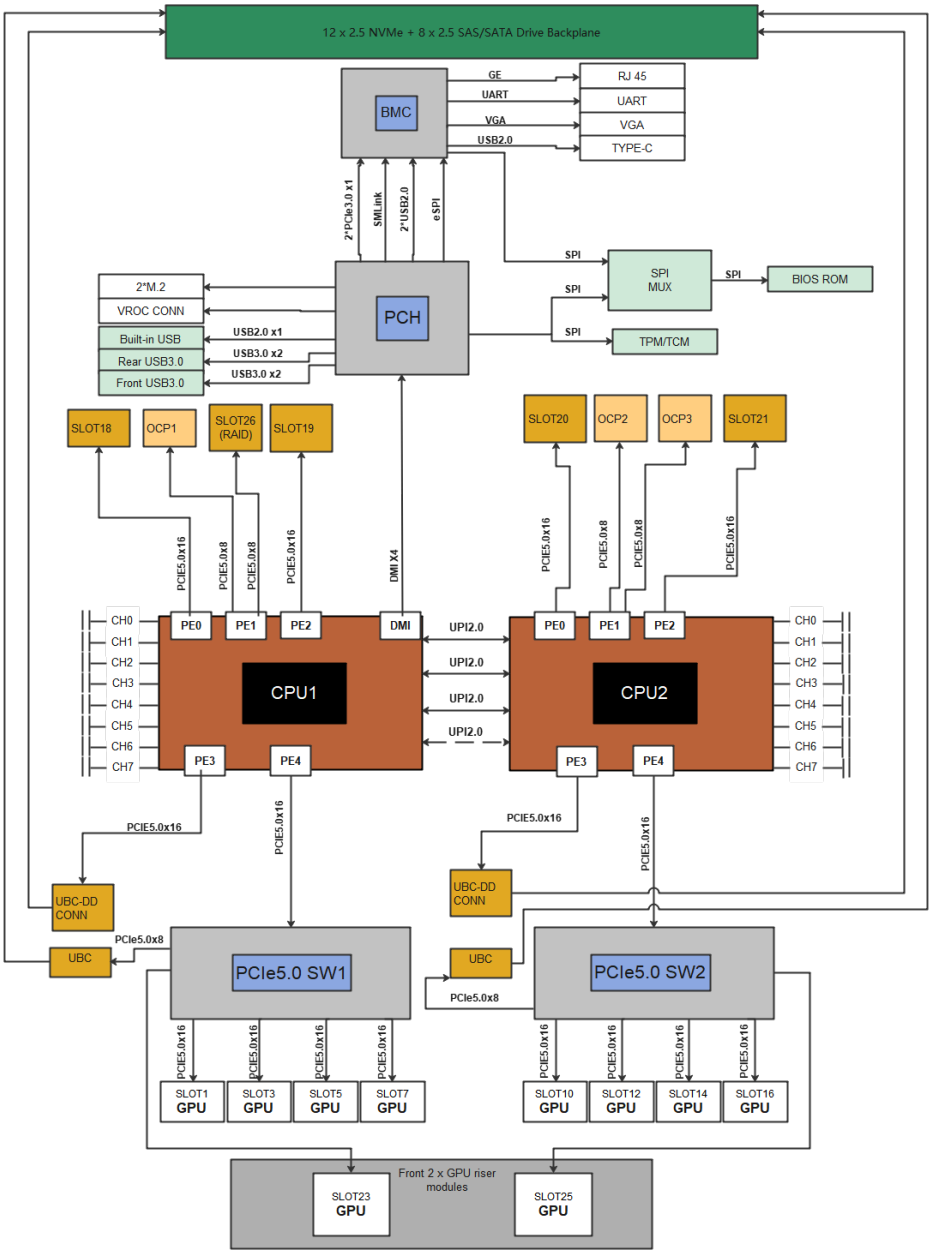

Figure 4-3 Logical structure 3 (configuration with 24 x 3.5" drives + 8 x dual-width GPUs + 1 pass-through board)

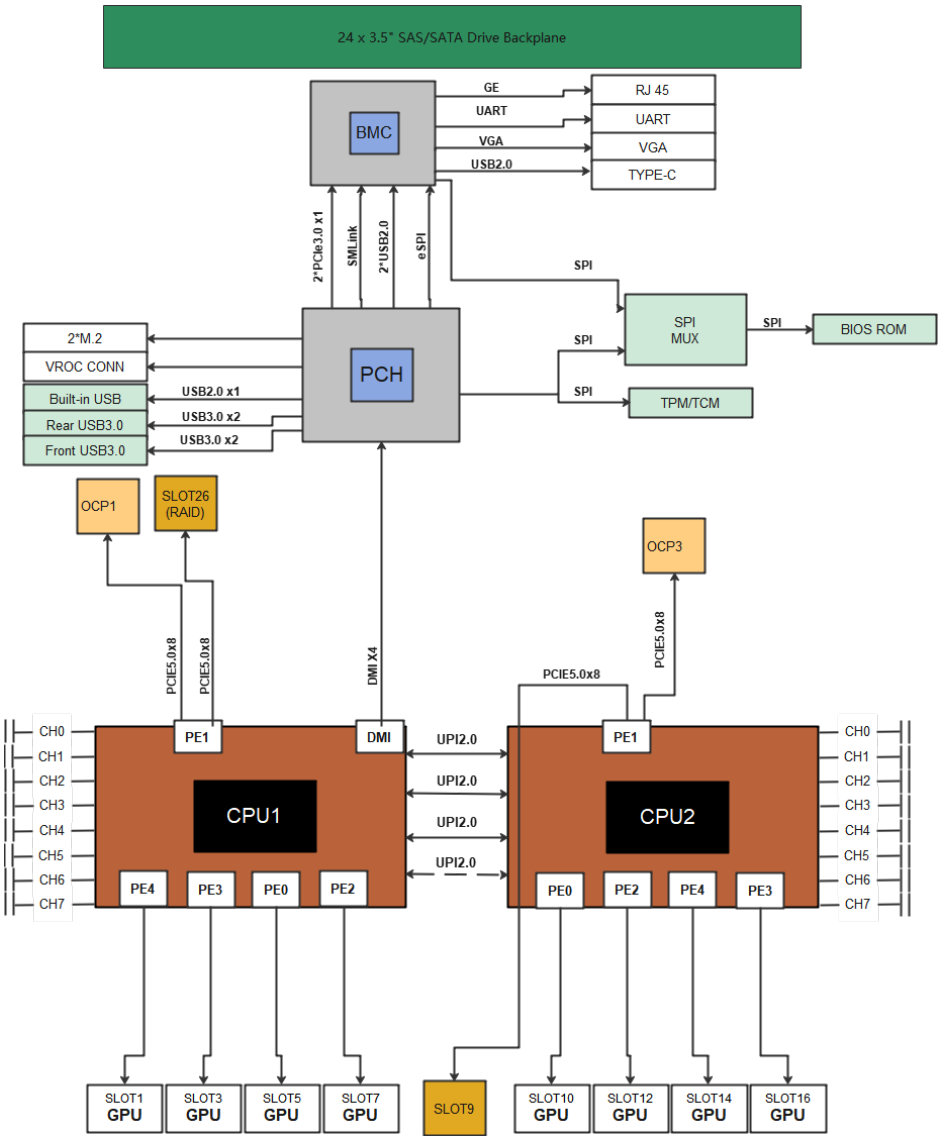

- A server supports two next-generation Intel® Xeon® Scalable processors (Sapphire Rapids). It supports 32 DDR5 DIMMs. The processors interconnect with each other through four UltraPath Interconnect (UPI) links at a speed of up to 16 Gbit/s.
- The PCIe bus resources of the processor are connected to the PCIe riser card through PCBs or cables. Different PCIe riser cards support PCIe slots of different specifications. CPU 1 and CPU 2 support a maximum of three OCP 3.0 X8 NICs, depending on the configurations.
- The BMC management chip integrated on the mainboard supports a video graphics array (VGA) port, a management network port, and a serial port.

 Copyright © xFusion Digital Technologies Co., Ltd.

5 Hardware Description

5.1 Front Panel
5.2 Rear Panel
5.3 Processors
5.4 Memory
5.5 Storage
5.6 Network
5.7 I/O Expansion
5.8 PSUs
5.9 Fan Modules
5.10 Boards

5.1 Front Panel

5.1.1 Appearance

- 24 x 3.5" drive configuration

Figure 5-1 Front view

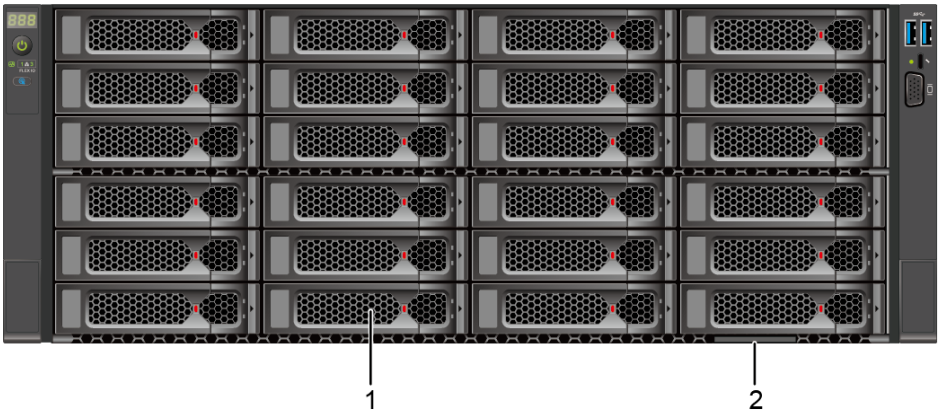

 Copyright © xFusion Digital Technologies Co., Ltd.

1	Drives	2	Slide-out label plate (with an SN label)

- 20 x 2.5" drive configuration

Figure 5-2 Front view

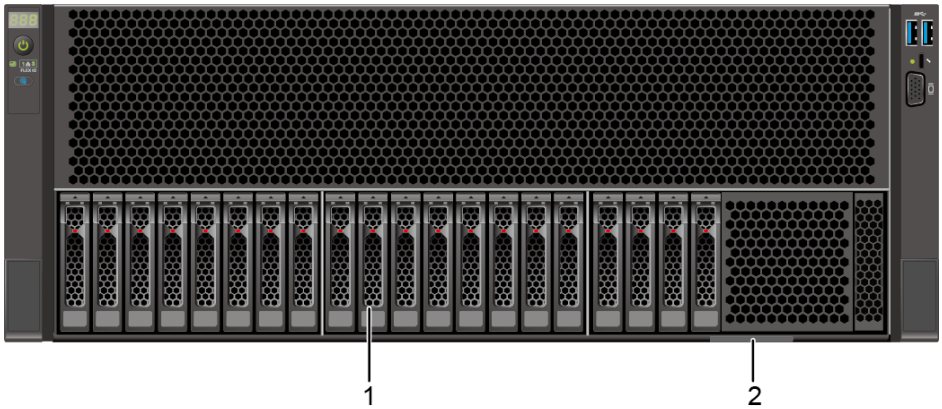

1	Drives	2	Slide-out label plate (with an SN label)

5.1.2 Indicators and Buttons

Positions of Indicators and Buttons

- 24 x 3.5" drive configuration

Figure 5-3 Indicators and buttons on the front panel

1	Fault diagnosis LED	2	Power button/indicator
3	Health status indicator	4	Unit identification light (UID) button/indicator

 Copyright © xFusion Digital Technologies Co., Ltd.

5	FlexIO card 1 presence indicator	6	FlexIO card 3 presence indicator
7	iBMC direct connect management port indicator	-	-

- 20 x 2.5" drive configuration

Figure 5-4 Indicators and buttons on the front panel

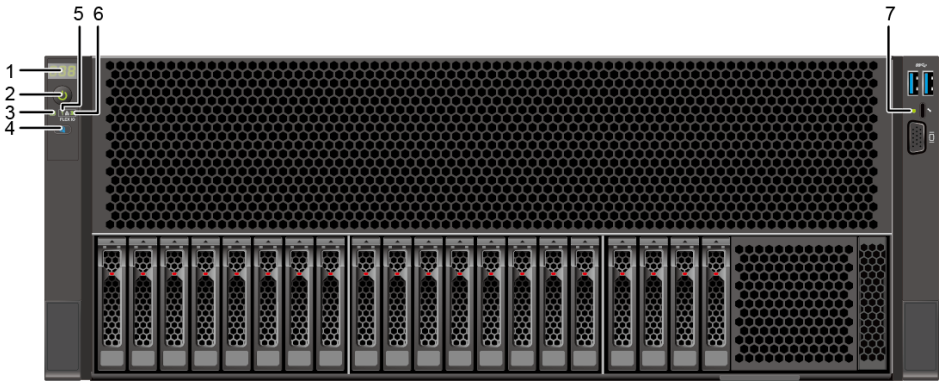

1	Fault diagnosis LED	2	Power button/indicator
3	Health status indicator	4	UID button/indicator
5	FlexIO card 1 presence indicator	6	FlexIO card 3 presence indicator
7	iBMC direct connect management port indicator	-	-

Indicator and Button Description

Table 5-1 Indicators and buttons on the front panel

Silkscreen	Indicators and Buttons	Description
888	Fault diagnosis LED	• ---: The device is operating properly. • Error code: A component is faulty. For details about error codes, see the ***FusionServer GPU Server iBMC Alarm Handling***.

 Copyright © xFusion Digital Technologies Co., Ltd.

Silkscreen	Indicators and Buttons	Description
⏻	Power button/ indicator	Power indicator: ● Off: The device is powered off. ● Steady green: The device is powered on. ● Blinking yellow: The iBMC is starting. The power button is locked and cannot be pressed. The iBMC is started in about 1 minute, and then the power indicator turns steady yellow. ● Steady yellow: The device is standby. Power button: ● When the device is powered on, you can press this button to gracefully shut down the OS. **NOTE** For different OSs, you may need to shut down the OS as prompted. ● When the device is powered on, you can hold down this button for 6 seconds to forcibly power off the device. ● When the power indicator is steady yellow, you can press this button to power on the device.
	Health status indicator	● Off: The device is powered off or is faulty. ● Blinking red at 1 Hz: A major alarm has been generated on the system. ● Blinking red at 5 Hz: A critical alarm has been generated on the system. ● Steady green: The device is operating properly.
	UID button/ indicator	The UID button/indicator helps identify and locate a device. UID indicator: ● Off: The device is not being located. ● Blinking or steady blue: The device is being located. UID button: ● You can control the UID indicator status by pressing the UID button or using the iBMC. ● You can press this button to turn on or off the UID indicator. ● You can press and hold down this button for 4 to 6 seconds to reset the iBMC.

 Copyright © xFusion Digital Technologies Co., Ltd.

Silkscreen	Indicators and Buttons	Description
	FlexIO card presence indicator	Indicates whether the FlexIO card is detected. ● Off: The OCP 3.0 NIC is not in position. ● Blinking green at 0.5 Hz: The OCP 3.0 NIC is in position but is not powered on. ● Blinking green at 2 Hz: The OCP 3.0 NIC is in position and has just been inserted. ● Steady green: The OCP 3.0 NIC is in position, and the power supply is normal.
	iBMC direct connect management port indicator	Indicates the status when the iBMC direct connect management port connects to a terminal (local PC or Android mobile phone): ● Off: No terminal is connected. ● Blinking green at short intervals for 3 seconds and then off: The port is disabled. ● Steady green: The terminal is connected. Indicates the status when the iBMC direct connect management port connects to a USB device: ● Blinking red at long intervals: The job fails or an error is reported when the job is complete. ● Blinking green at short intervals: The job is being executed. ● Blinking green at short intervals for 3 seconds and then off: The port is disabled. ● Steady green: The server configuration file is being copied from the USB device or the job is successfully completed.

5.1.3 Ports

Port Positions

- 24 x 3.5" drive configuration

 Copyright © xFusion Digital Technologies Co., Ltd.

Figure 5-5 Ports on the front panel

1	USB 3.0 ports	2	iBMC direct connect management port
3	VGA port	-	-

- 20 x 2.5" drive configuration

Figure 5-6 Ports on the front panel

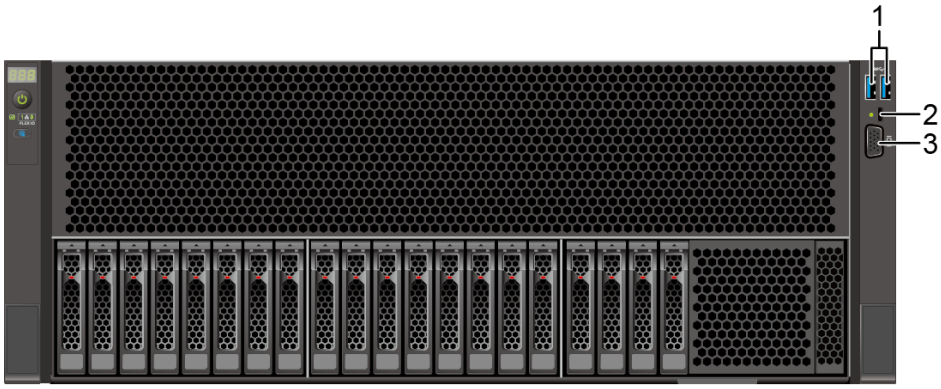

1	USB 3.0 ports	2	iBMC direct connect management port
3	VGA port	-	-

Port Description

Table 5-2 Ports on the front panel

Port	Type	Quantity[Note]	Description
VGA port	DB15	1	Used to connect a display terminal, such as a monitor or KVM.

 Copyright © xFusion Digital Technologies Co., Ltd.

Port	Type	Quantity[Note]	Description
iBMC direct connect management port	USB Type-C **NOTE** The USB 2.0 protocol is supported.	1	Used to connect to a local PC or mobile phone through a USB Type-C cable to monitor and manage the system. **NOTE** Only local PCs running Windows 10 and mobile phones running Android are supported. ● To log in to the iBMC from the local PC, enter **https:///***IP address of the iBMC management network port* in the address box of the browser on the local PC. ● When accessing the iBMC through a mobile phone, you need to use the mobile application FusionMobile to access the iBMC. For details, see the ***FusionMobile User Guide***. Used to connect to a USB device. **NOTICE** ● Before connecting an external USB device, ensure that the USB device functions properly. Otherwise, it may adversely impact the server. ● For details about how to connect a USB device to the iBMC direct connect management port, see the ***FusionServer G5500 Server iBMC User Guide***.
USB port	USB 3.0	2	Used to connect to a USB 3.0 device. **NOTICE** ● Before connecting an external USB device, ensure that the USB device functions properly. Otherwise, it may adversely impact the server. ● The USB 3.0 port can be used to supply power to low-power peripherals. However, the USB 3.0 port must comply with the USB specifications. To run advanced peripherals, such as external CD/DVD drives, an external power supply is required.

 Copyright © xFusion Digital Technologies Co., Ltd.

Port	Type	Quantity[Note]	Description
Note: The number of ports varies depending on server configuration. This table lists the maximum number of ports in different configurations.			

5.2 Rear Panel

5.2.1 Appearance

Figure 5-7 Rear view

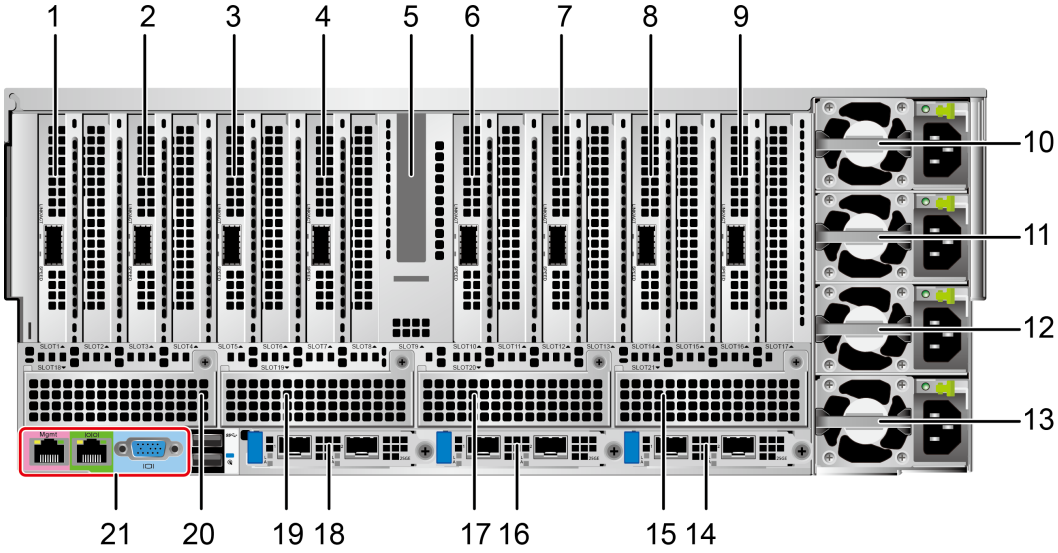

1	Slot 1 (PCIe 5.0 x16)	2	Slot 3 (PCIe 5.0 x16)
3	Slot 5 (PCIe 5.0 x16)	4	Slot 7 (PCIe 5.0 x16)
5	Slot 9 (PCIe 5.0 x 16) [a]	6	Slot 10 (PCIe 5.0 x16)
7	Slot 12 (PCIe 5.0 x16)	8	Slot 14 (PCIe 5.0 x16)
9	Slot 16 (PCIe 5.0 x 16)	10	PSU 1
11	PSU 2	12	PSU 3
13	PSU 4	14	FlexIO card 3
15	Slot 21 (PCIe 5.0 x16) [b]	16	FlexIO card 2
17	Slot 20 (PCIe 5.0 x16) [b]	18	FlexIO card 1
19	Slot 19 (PCIe 5.0 x16) [b]	20	Slot 18 (PCIe 5.0 x16) [b]
21	BMC card	-	-

 Copyright © xFusion Digital Technologies Co., Ltd.

Note: Chassis silkscreen slots 2, 4, 6, 8, 11, 13, 15, and 17 are unavailable. a: Supported only in the PCIe pass-through board scenario. b: Supported only in the PCIe switch board scenario.

NOTE

- For details about the OCP 3.0 NIC, see **5.6.1 OCP 3.0 NICs**.
- The figure is for reference only. The actual configuration may vary.

5.2.2 Indicators and Buttons

Indicator Positions

Figure 5-8 Indicators on the rear panel

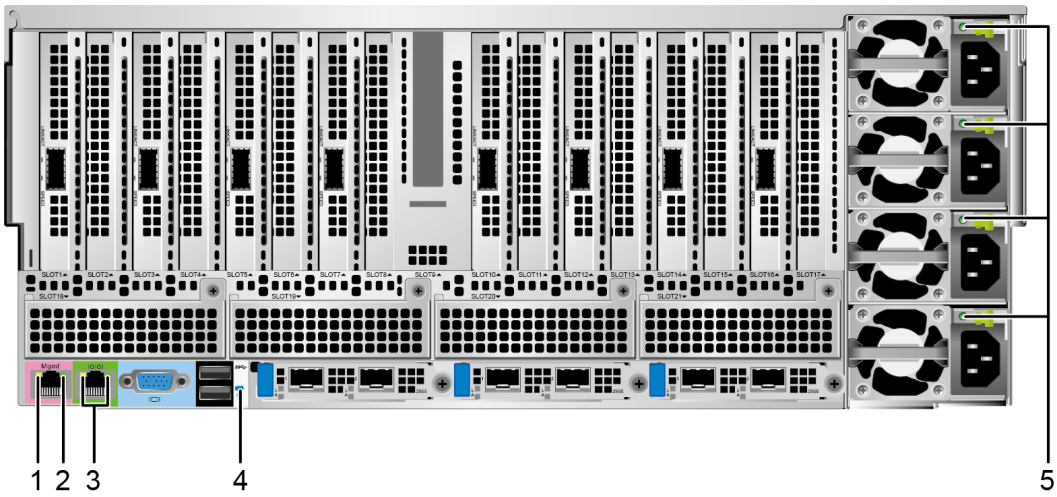

1	Data transmission status indicator of the management network port	2	Connection status indicator of the management network port
3	Serial port indicators **NOTE** Reserved and unavailable currently.	4	UID indicator
5	PSU indicator	-	-

 Copyright © xFusion Digital Technologies Co., Ltd.

Indicator Description

Table 5-3 Description of indicators on the rear panel

Silkscreen	Indicator	Description
-	Data transmission status indicator of the management network port	● Off: No data is being transmitted. ● Blinking yellow: Data is being transmitted.
-	Connection status indicator of the management network port	● Off: The network is not connected. ● Steady green: The network port is properly connected.
-	PSU indicator	● Off: No power is supplied. ● Blinking green at 1 Hz: – The input is normal, and the server is in the standby state. – The input is overvoltage or undervoltage. – The PSU is in deep hibernation mode. ● Blinking green at 4 Hz: The firmware is being upgraded online. ● Steady green: The input and output are normal. ● Steady orange: The input is normal but there is no output. **NOTE** The possible causes of no output are as follows: ● Power supply overtemperature protection ● Power output overcurrent or short-circuit ● Output overvoltage ● Short-circuit protection ● Device failure (excluding failure of all devices)
	UID indicator	The UID indicator helps identify and locate a device. ● Off: The device is not being located. ● Blinking or steady blue: The device is being located. **NOTE** You can control the UID indicator status by pressing the UID button or using the iBMC.

 Copyright © xFusion Digital Technologies Co., Ltd.

5.2.3 Ports

Port Positions

Figure 5-9 Ports on the rear panel

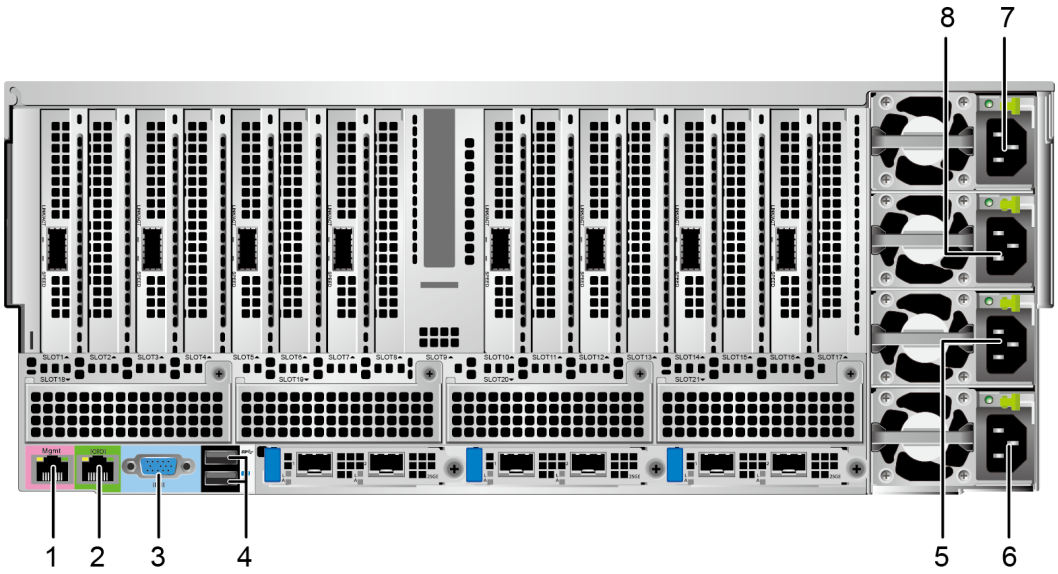

1	Management network port	2	Serial port
3	VGA port	4	USB 3.0 ports
5	Socket for PSU 3	6	Socket for PSU 4
7	Socket of PSU 1	8	Socket of PSU 2

Port Description

Table 5-4 Ports on the rear panel

Port	Type	Quantity	Description
Management network port	RJ45	1	iBMC management network port, which is used to manage the server. **NOTE** The management network port is a GE port that supports 100 Mbit/s and 1000 Mbit/s auto-negotiation.

Copyright © xFusion Digital Technologies Co., Ltd.

Port	Type	Quantity	Description
Serial port	RJ45	1	A port used for debugging. By default, it serves as the OS serial port. You can also set it as the iBMC serial port on the iBMC CLI. **NOTE** The port is a 3-wire serial communication port, and its default baud rate is 115,200 bit/s.
VGA port	DB15	1	Used to connect a display terminal, such as a display or KVM.
USB port	USB 3.0	2	Used to connect to a USB 3.0 device. **NOTICE** ● The maximum current is 1.3 A for an external USB device. ● Before connecting an external USB device, ensure that the USB device functions properly. Otherwise, it may adversely impact the server. ● The USB 3.0 port can be used to supply power to low-power peripherals. However, the USB 3.0 port must comply with the USB specifications. To run advanced peripherals, such as external CD/DVD drives, an external power supply is required.
PSU socket	-	4	Used to connect to a power distribution unit (PDU) through a power cable. You can select the PSUs as required. **NOTE** When determining the PSUs, ensure that the rated power of the PSUs is greater than that of the server.

5.3 Processors

- Supports two processors.
- Processors of the same model must be used in a server.
- For details about the optional components, consult your local sales representative or see "Search Parts" in the **Compatibility Checker**.

 Copyright © xFusion Digital Technologies Co., Ltd.

Figure 5-10 Positions of the processors

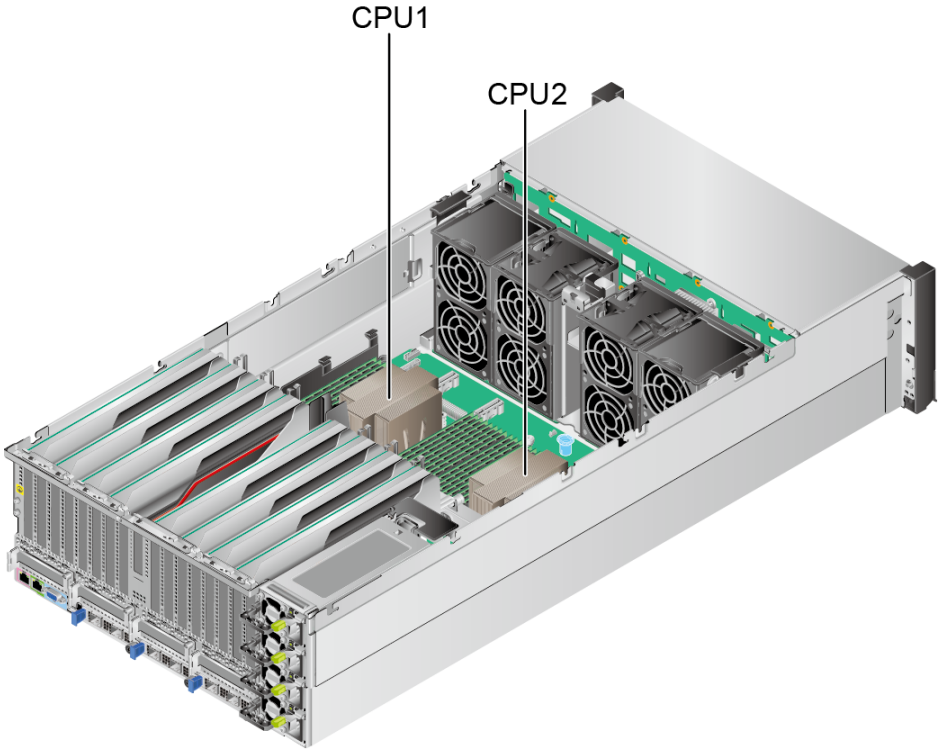

5.4 Memory

5.4.1 DDR5 Memory

5.4.1.1 Memory Identifier

You can determine the memory module properties based on the label attached to the memory module and the following figures and tables.

Figure 5-11 Memory identifier

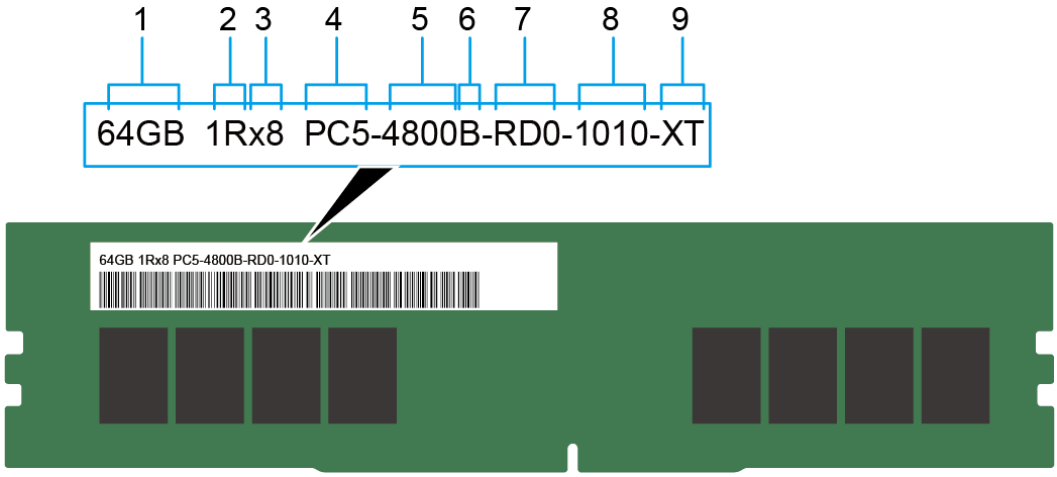

 Copyright © xFusion Digital Technologies Co., Ltd.

No.	Description	Example
1	Capacity	● 16 GB ● 32 GB ● 64 GB ● 128 GB
2	rank(s)	● 1R = Single rank ● 2R = Dual rank ● 4R = Quad rank ● 8R = Octal rank
3	Data width on the DRAM	● x4: 4-bit ● x8: 8-bit
4	Type of the memory interface	● PC5 = DDR5
5	Maximum memory speed	● 4800 MT/S
6	Memory latency parameters (CL-nRCD-nRP)	● A = 34-34-34 ● B = 40-40-40 ● C = 42-42-42
7	DIMM type	● RD0: reference design for version RDIMM D0
8	SPD version	● 10: SPD version ● 10: SPD versions from Byte 192 to Byte 447
9	Temperature grade	● Extended temperature grade (XT): 0°C to 95°C (32°F to 203°F) ● Normal temperature grade (NT): 0°C to 85°C (32°F to 185°F)

5.4.1.2 Memory Subsystem Architecture

The server provides 32 memory interfaces. Each processor integrates eight memory channels.

Install the memory modules in the primary memory channels first. If the primary memory channel is not populated, the memory modules in secondary memory channel cannot be used.

 Copyright © xFusion Digital Technologies Co., Ltd.

Table 5-5 Memory channels

CPU	Memory Channel	DIMM
CPU 1	A (primary)	DIMM000(A)
	A	DIMM001(I)
	B (primary)	DIMM010(B)
	B	DIMM011(J)
	C (primary)	DIMM020(C)
	C	DIMM021(K)
	D (primary)	DIMM030(D)
	D	DIMM031(L)
	E (primary)	DIMM040(E)
	E	DIMM041(M)
	F (primary)	DIMM050(F)
	F	DIMM051(N)
	G (primary)	DIMM060(G)
	G	DIMM061(O)
	H (primary)	DIMM070(H)
	H	DIMM071(P)
CPU 2	A (primary)	DIMM100(A)
	A	DIMM101(I)
	B (primary)	DIMM110(B)
	B	DIMM111(J)
	C (primary)	DIMM120(C)
	C	DIMM121(K)
	D (primary)	DIMM130(D)
	D	DIMM131(L)
	E (primary)	DIMM140(E)
	E	DIMM141(M)
	F (primary)	DIMM150(F)
	F	DIMM151(N)
	G (primary)	DIMM160(G)

 Copyright © xFusion Digital Technologies Co., Ltd.

CPU	Memory Channel	DIMM
	G	DIMM161(O)
	H (primary)	DIMM170(H)
	H	DIMM171(P)

5.4.1.3 Memory Compatibility

Observe the following rules when configuring DDR5 memory modules:

NOTICE

- A server must use DDR5 memory modules of the same part number (P/N code), and the memory speed is the minimum value of the following items:
  - Memory speed supported by a processor.
  - Maximum operating speed of a memory module.
- The DDR5 DIMMs of different types (RDIMM and LRDIMM) and specifications (capacity, bit width, rank, and height) cannot be used together.
- For details about the optional components, consult your local sales representative or see "Search Parts" in the **Compatibility Checker**.

- The memory can be used with the 3rd generation Intel® Xeon® Scalable processors (Sapphire Rapids). The maximum memory capacity supported by all processor models is the same.
- For details about the capacity type of a single memory module, see "Search Parts" in the **Compatibility Checker**.
- The maximum number of memory modules supported depends on the memory module type and number of ranks.

  NOTE

  Each memory channel supports a maximum of eight ranks. The number of memory modules supported by each channel varies depending on the number of ranks supported by each channel:

  Number of memory modules supported by each channel ≤ Number of ranks supported by each memory channel/Number of ranks supported by each memory module.
- Each memory channel supports more than eight ranks for load-reduced DIMMs (LRDIMMs).

  NOTE

  A quad-rank LRDIMM generates the same electrical load as a single-rank RDIMM on a memory bus.

 Copyright © xFusion Digital Technologies Co., Ltd.

Table 5-6 DDR5 memory parameters

Parameter		Specifications				
Capacity of a DDR5 memory module (GB)		16	32	64	128	256
Type		RDIMM	RDIMM	RDIMM	RDIMM-3DS	RDIMM-3DS
Rated speed (MT/s)		4800	4800	4800	4800	4800
Operating voltage (V)		1.1	1.1	1.1	1.1	1.1
Maximum number of DDR5 DIMMs in a server[a]		32	32	32	32	32
Maximum DDR5 memory capacity of the server (GB)		512	1024	2048	4096	8192
Actual speed (MT/s)	1DPC[b]	4800	4800	4800	4800	4800
	2DPC	4400	4400	4400	4400	4400

- a: The maximum number of DDR5 memory modules is based on dual-processor configuration.
- b: DIMM per channel (DPC) indicates the number of memory modules per channel.
- The information listed in this table is for reference only. For details, consult the local sales representative.

5.4.1.4 DIMM Installation Rules

Observe the following rules when configuring DDR5 memory modules:

- The memory modules configured must be DDR5 RDIMMs.
- The memory modules must be configured with the same number of ranks.
- Install filler memory modules in vacant slots.

5.4.1.5 Positions of Memory Modules

A server supports up to 32 DDR5 memory modules. To maximize performance, it is advised to use balanced memory configuration.

Observe the memory module installation rules when configuring memory modules. For details, see the **Server Assembly Guide**.

 Copyright © xFusion Digital Technologies Co., Ltd.

NOTICE

At least one DDR5 memory module must be installed in the primary memory channels corresponding to each CPU.

Figure 5-12 Positions of memory modules

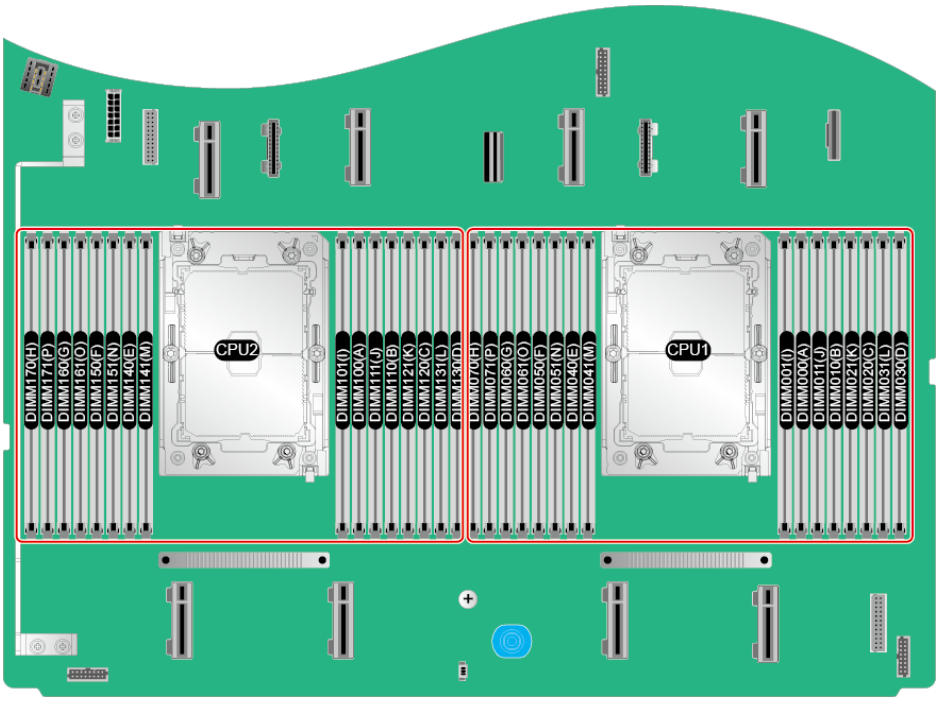

 Copyright © xFusion Digital Technologies Co., Ltd.

Figure 5-13 DDR5 memory installation guidelines (two processors)

CPU	Channel	DIMM Slot	Number of DIMMs						
			2	4	8	12	16	24	32
CPU1	A	DIMM000(A)	●	●	●	●	●	●	●
		DIMM001(I)						●	●
	B	DIMM010(B)					●	●	●
		DIMM011(J)							●
	C	DIMM020(C)			●	●	●	●	●
		DIMM021(K)						●	●
	D	DIMM030(D)				●	●	●	●
		DIMM031(L)							●
	E	DIMM040(E)			●	●	●	●	●
		DIMM041(M)						●	●
	F	DIMM050(F)				●	●	●	●
		DIMM051(N)							●
	G	DIMM060(G)		●	●	●	●	●	●
		DIMM061(O)						●	●
	H	DIMM070(H)					●	●	●
		DIMM071(P)							●
CPU2	A	DIMM100(A)	●	●	●	●	●	●	●
		DIMM101(I)						●	●
	B	DIMM110(B)					●	●	●
		DIMM111(J)							●
	C	DIMM120(C)			●	●	●	●	●
		DIMM121(K)						●	●
	D	DIMM130(D)				●	●	●	●
		DIMM131(L)							●
	E	DIMM140(E)			●	●	●	●	●
		DIMM141(M)						●	●
	F	DIMM150(F)				●	●	●	●
		DIMM151(N)							●
	G	DIMM160(G)		●	●	●	●	●	●
		DIMM161(O)						●	●
	H	DIMM170(H)					●	●	●
		DIMM171(P)							●

5.4.1.6 Memory Protection Technologies

DDR5 DIMMs support the following memory protection technologies:

 Copyright © xFusion Digital Technologies Co., Ltd.

- ECC
- Memory Mirroring
- Memory Single Device Data Correction (SDDC)
- Failed DIMM Isolation
- Memory Thermal Throttling
- Command/Address Parity Check and Retry
- Memory Demand/Patrol Scrubbing
- Memory Data Scrambling
- Memory Multi Rank Sparing
- Post Package Repair (PPR)
- Write Data CRC Protection
- Adaptive Data Correction - Single Region (ADC-SR)
- Adaptive Double Device Data Correction - Multiple Region (ADDDC-MR)

5.5 Storage

5.5.1 Drive Configuration and Drive Numbering

 Copyright © xFusion Digital Technologies Co., Ltd.

5.5.1.1 24 x 3.5" Drive Configuration

Drive Configuration

Table 5-7 Drive configuration

Configuration	Front Drive	Drive Management Mode
24 x 3.5" drive switch model configuration	• Front drives: 24 x 3.5" – Slots 0 to 3 support only SAS/SATA drives. – Slots 4 to 5 support SAS/SATA/NVMe drives. – Slots 6 to 9 support only SAS/SATA drives. – Slots 10 to 11 support SAS/SATA/NVMe drives. – Slots 12 to 15 support only SAS/SATA drives. – Slots 16 to 17 support SAS/SATA/NVMe drives. – Slots 18 to 21 support only SAS/SATA drives. – Slots 22 and 23 support only SAS/SATA/NVMe drives.	• SAS/SATA drive: 1 x RAID controller card[a] • NVMe drive: – CPU pass-through – PCIe switch
24 x 3.5" drive pass-through model configuration	• Front drives: 24 x 3.5" – Slots 0 to 23 support only SAS/SATA drives.	• SAS/SATA drive: 1 x RAID controller card[a]
• a: The PCIe plug-in RAID controller card is installed in slot 26 by default. • For details about the optional components, consult your local sales representative or see "Search Parts" in the **Compatibility Checker**.		

 Copyright © xFusion Digital Technologies Co., Ltd.

Drive Numbering

NOTICE

The drive numbers identified by the RAID controller card vary depending on the cabling of the RAID controller card. This section uses the drive numbers identified by a RAID controller card that adopts the default cabling described in section "Internal Cabling" in the ***FusionServer G5500 V7 Server Maintenance and Service Guide***.

Drive numbering of the 24 x 3.5" drive switch model configuration in **Table 5-7**

Figure 5-14 Drive numbering

Table 5-8 Drive numbering

Drive Number	Drive Number Displayed on the iBMC WebUI	Drive Number Identified by the RAID Controller Card
0	0	0
1	1	1
2	2	2
3	3	3
4	4	4[a]
5	5	5[a]
6	6	6
7	7	7
8	8	8
9	9	9
10	10	10[a]
11	11	11[a]

Copyright © xFusion Digital Technologies Co., Ltd.

Drive Number	Drive Number Displayed on the iBMC WebUI	Drive Number Identified by the RAID Controller Card
12	12	12
13	13	13
14	14	14
15	15	15
16	16	16[a]
17	17	17[a]
18	18	18
19	19	19
20	20	20
21	21	21
22	22	22[a]
23	23	23[a]

- a: If the slot is configured with a SAS/SATA drive, the RAID controller card can manage the drive and allocate a number to the drive.
- For details about the optional components, consult your local sales representative or see "Search Parts" in the **Compatibility Checker**.

Drive numbering of the 24 x 3.5" drive pass-through model configuration in **Table 5-7**

Figure 5-15 Drive numbering

 Copyright © xFusion Digital Technologies Co., Ltd.

Table 5-9 Drive numbering

Drive Number	Drive Number Displayed on the iBMC WebUI	Drive Number Identified by the RAID Controller Card
0	0	0
1	1	1
2	2	2
3	3	3
4	4	4
5	5	5
6	6	6
7	7	7
8	8	8
9	9	9
10	10	10
11	11	11
12	12	12
13	13	13
14	14	14
15	15	15
16	16	16
17	17	17
18	18	18
19	19	19
20	20	20
21	21	21
22	22	22
23	23	23
For details about the optional components, consult your local sales representative or see "Search Parts" in the **Compatibility Checker**.		

 Copyright © xFusion Digital Technologies Co., Ltd.

5.5.1.2 20 x 2.5" Drive Configuration

Drive Configuration

Table 5-10 Drive configuration

Configuration	Front Drive	Drive Management Mode
20 x 2.5" drive switch model configuration	• Front drives: 20 x 2.5" – Slots 0 to 3 and 12 to 15 support only SAS/SATA drives. – Slots 4 to 11 and slots 16 to 19 support only NVMe drives.	• SAS/SATA drive: 1 x RAID controller card[a] • NVMe drive: – CPU pass-through – PCIe switch
• a: The PCIe plug-in RAID controller card is installed in slot 26 by default. • Consult your local sales representative or see "Search Parts" in the **Compatibility Checker**.		

Drive Numbering

NOTICE

The drive numbers identified by the RAID controller card vary depending on the cabling of the RAID controller card. This section uses the drive numbers identified by a RAID controller card that adopts the default cabling described in "Internal Cabling" in the *FusionServer G5500 V7 Server Maintenance and Service Guide*.

Drive numbering of the 20 x 2.5" drive (8 x SAS/SATA + 12 X NVMe) configuration in **Table 5-10**

Figure 5-16 Drive numbering

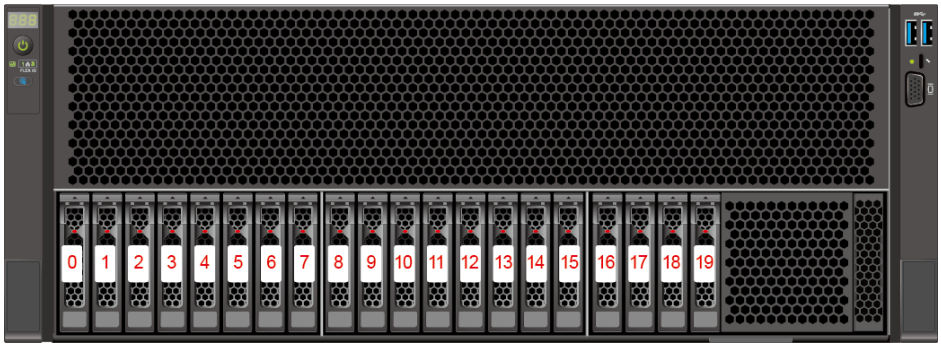

 Copyright © xFusion Digital Technologies Co., Ltd.

Table 5-11 Drive numbering

Drive Number	Drive Number Displayed on the iBMC WebUI	Drive Number Identified by the RAID Controller Card
0	0	0
1	1	1
2	2	2
3	3	3
4	4	-
5	5	-
6	6	-
7	7	-
8	8	-
9	9	-
10	10	-
11	11	-
12	12	12
13	13	13
14	14	14
15	15	15
16	16	-
17	17	-
18	18	-
19	19	-
Consult your local sales representative or see "Search Parts" in the **Compatibility Checker**.		

 Copyright © xFusion Digital Technologies Co., Ltd.

5.5.2 Drive Indicators

SAS/SATA Drive Indicators

Figure 5-17 SAS/SATA drive indicators

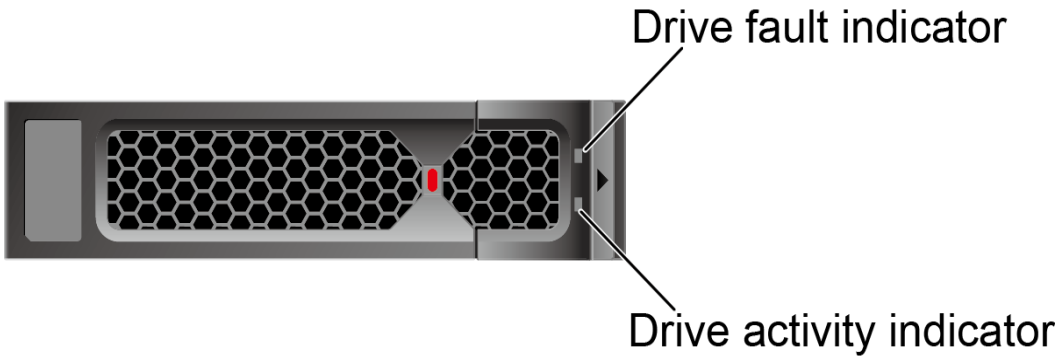

Table 5-12 SAS/SATA drive indicator description

Active Indicator (Green)	Fault Indicator (Red/Blue)	State Description
Off	Off	The drive is not detected.
Steady on	Off	The drive is detected.
Blinking at 4 Hz	Off	Data is being read or written properly, or data on the primary drive is being rebuilt.
Steady on	Blinking blue at 4 Hz	The drive is being located.
Blinking at 1 Hz	Blinking red at 1 Hz synchronously	Data on the secondary drive is being rebuilt.
Off	Red steady on	A drive in a RAID array is removed.
Steady on	Red steady on	The drive is faulty.

 Copyright © xFusion Digital Technologies Co., Ltd.

NVMe Drive Indicators

Figure 5-18 NVMe drive indicators

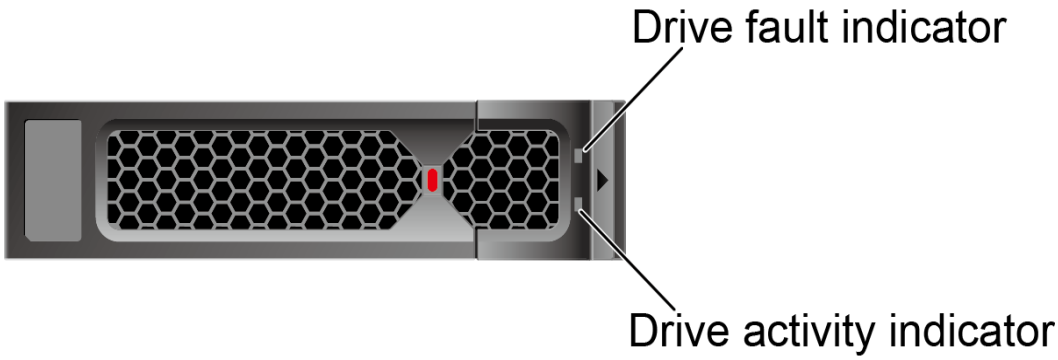

- If the VMD function is enabled and the latest VMD driver is installed, the NVMe drives support surprise hot swap.

Table 5-13 NVMe drive indicator description (VMD function enabled)

Active Indicator (Green)	Fault Indicator (Red/Blue)	State Description
Off	Off	The NVMe drive is not detected.
Steady on	Off	The NVMe drive is detected and operating properly.
Blinking at 4 Hz	Off	Data is being read from or written to the NVMe drive.
Steady on/ blinking	Blinking blue at 4 Hz	The NVMe drive is being located.
Blinking at 1 Hz	Blinking red at 1 Hz synchronously	Data on the secondary NVMe drive is being rebuilt.
Steady on/off	Red steady on	The NVMe drive is faulty.

- If the VMD function is disabled, the NVMe drives support only orderly hot swap.

Table 5-14 NVMe drive indicator description (VMD function disabled)

Active Indicator (Green)	Fault Indicator (Red/Blue)	State Description
Off	Off	The NVMe drive is not detected.
Steady on	Off	The NVMe drive is detected and operating properly.
Blinking at 4 Hz	Off	Data is being read from or written to the NVMe drive.

 Copyright © xFusion Digital Technologies Co., Ltd.

Active Indicator (Green)	Fault Indicator (Red/Blue)	State Description
Steady on/ blinking	Blinking blue at 4 Hz	The NVMe drive is being located.
Off	Blinking red at 0.5 Hz	The NVMe drive has completed the hot swap process and is removable.
Off	Blinking red at 2 Hz	The NVMe drive is being hot-swapped.
Steady on/off	Red steady on	The NVMe drive is faulty.

5.5.3 RAID Controller Card

The RAID controller card supports RAID configuration, RAID level migration, and drive roaming.

- For details about the optional components, consult your local sales representative or see "OS and Parts Compatibility" in the **Compatibility Checker**.
- For details about the RAID controller card, see the *V7 Server RAID Controller Card User Guide*.

5.6 Network

5.6.1 OCP 3.0 NICs

OCP 3.0 NICs provide network expansion capabilities.

- The FlexIO slot supports an OCP 3.0 NIC, which can be configured as required.
- For details about the optional components, consult your local sales representative or see "OS and Parts Compatibility" in the **Compatibility Checker**.
- For details about OCP 3.0 NICs, see the documents of each OCP 3.0 NIC.

5.7 I/O Expansion

5.7.1 PCIe Cards

PCIe cards provide ease of expandability and connection.

- A maximum of 16 PCIe slots are supported.
- For details about the optional components, consult your local sales representative or see "OS and Parts Compatibility" in the **Compatibility Checker**.

 Copyright © xFusion Digital Technologies Co., Ltd.

- When IB cards are used to build an IB network, ensure that the IPoIB modes of the IB cards at both ends of the network connection are the same. For details, contact technical support.

5.7.2 PCIe Slots

PCIe Slots

Figure 5-19 PCIe slots

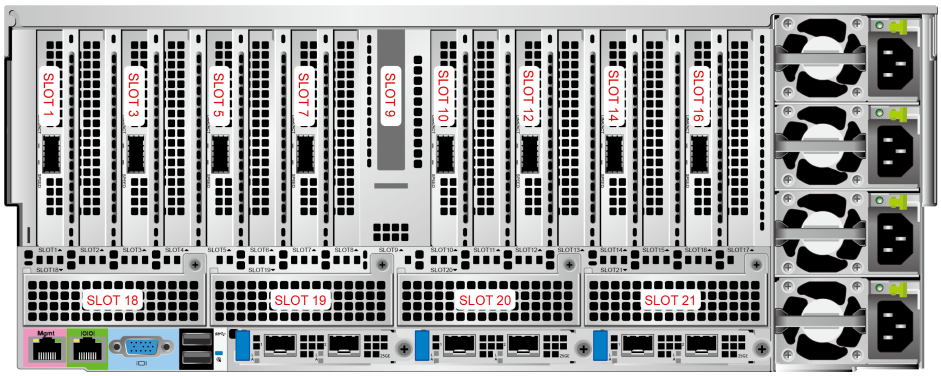

Figure 5-20 Built-in PCIe slot

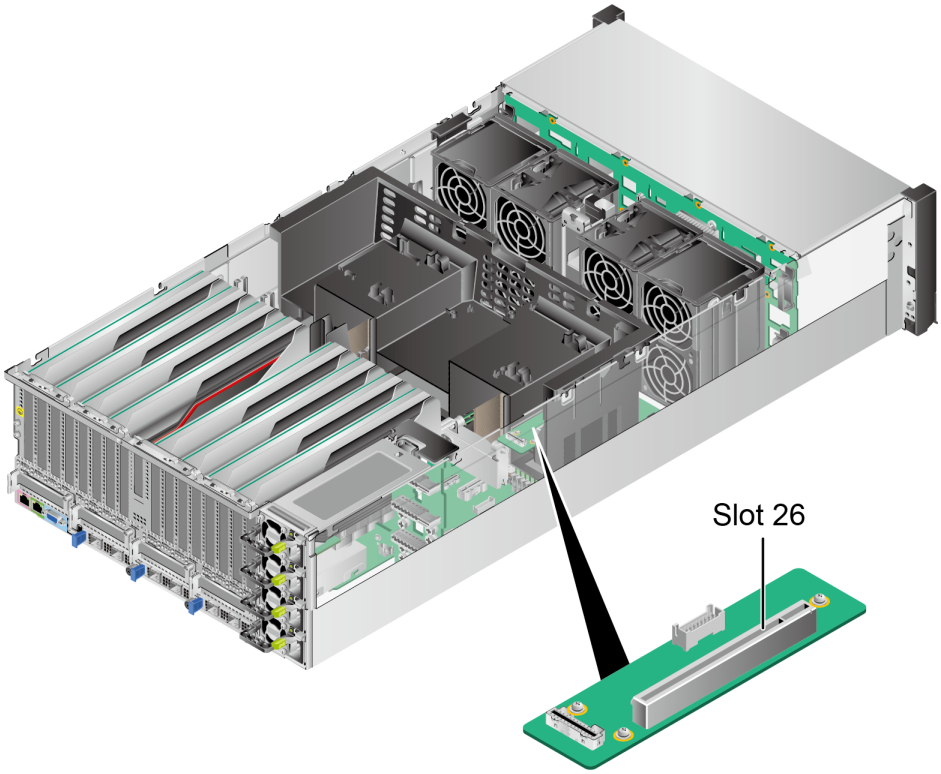

 Copyright © xFusion Digital Technologies Co., Ltd.

Figure 5-21 Front PCIe slots

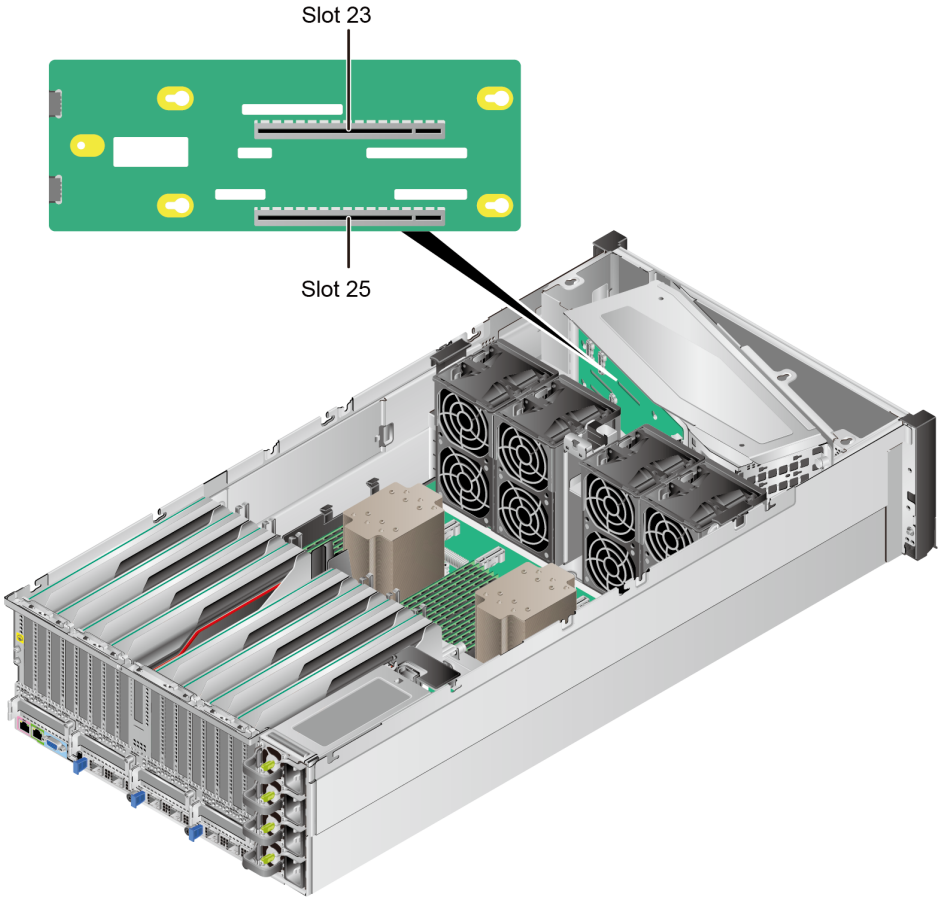

- The rear GPU module provides slots 1, 3, 5, 7, 9, 10, 12, 14, and 16.
- I/O module 1 provides slots 18, 19, 20, and 21. Select corresponding PCIe riser cards based on the NIC types.
- The built-in riser module provides slot 26 and supports built-in PCIe plug-in RAID controller cards.
- The front GPU riser module provides slots 23 and 25 and supports two GPUs.

PCIe Riser Cards

- PCIe riser card installed in I/O module 1 of the switch module

  The PCIe riser card is installed in I/O module 1 of the switch model. It provides PCIe slots 18, 19, 20, and 21.

  Figure 5-22 PCIe riser card

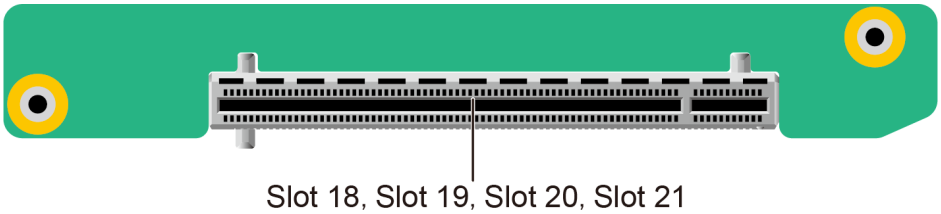

- PCIe riser card of the pass-through model

The PCIe riser card is installed in the middle of the pass-through module and provides PCIe slot 9.

Figure 5-23 PCIe riser card

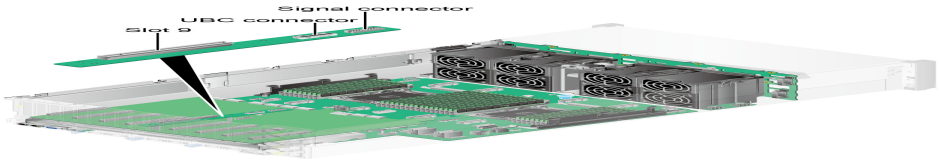

- PCIe riser card of the built-in riser module

  It is installed in the built-in riser module and provides PCIe slot 26.

Figure 5-24 PCIe riser card

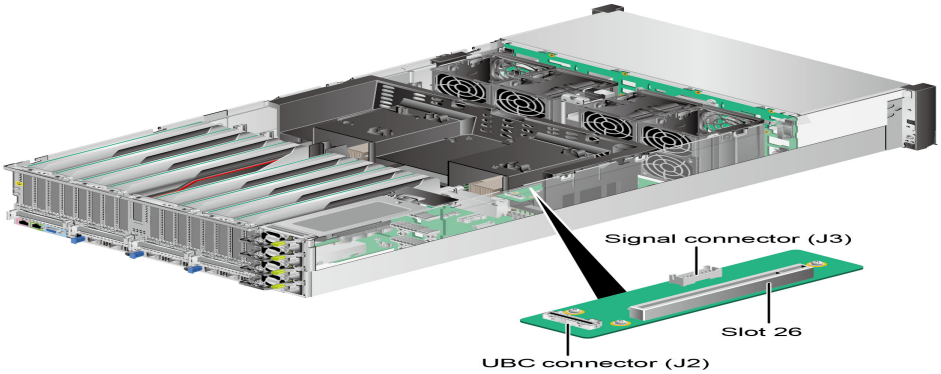

- PCIe riser card of the front GPU riser module

  It provides PCIe slots 23 and 25.

Figure 5-25 PCIe riser card

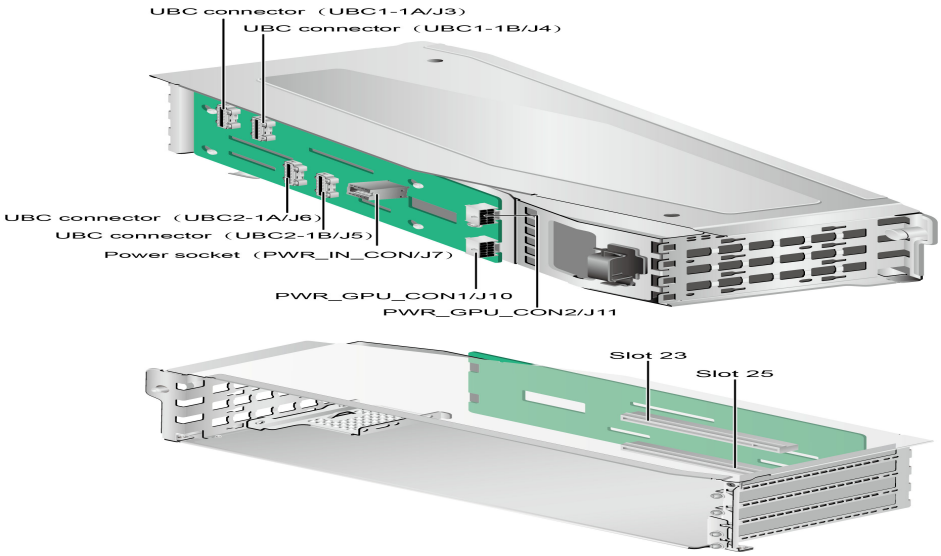

5.7.3 PCIe Slot Description

NOTE

The following table lists the PCIe port numbers mapped to CPUs. For details about the PCIe port numbers displayed on the BIOS screen, see the ***Server Eagle Stream Platform BIOS Parameter Reference***.

Server PCIe Slot Information

- Configuration with 24 x 3.5" drives + 8 x dual-width GPUs + 1 x switch board

Table 5-15 PCIe slot description

PCIe Riser Card	PCIe Slot	PCIe Slot or Port Description	CPU	PCIe Port No.	Switch	PCIe Device Supported by the PCIe Slot or Port
PCIe Riser Card Supported by the Rear GPU Module	Slot 1	PCIe 5.0 x16[a] (x16)[b]	CPU 1	PE 1	SW1	FHFL dual-width
	Slot 3	PCIe 5.0 x16 (x16)	CPU 1	PE 1	SW1	FHFL dual-width
	Slot 5	PCIe 5.0 x16 (x16)	CPU 1	PE 1	SW1	FHFL dual-width
	Slot 7	PCIe 5.0 x16 (x16)	CPU 1	PE 1	SW1	FHFL dual-width
	Slot 10	PCIe 5.0 x16 (x16)	CPU 2	PE 4	SW2	FHFL dual-width
	Slot 12	PCIe 5.0 x16 (x16)	CPU 2	PE 4	SW2	FHFL dual-width
	Slot 14	PCIe 5.0 x16 (x16)	CPU 2	PE 4	SW2	FHFL dual-width
	Slot 16	PCIe 5.0 x16 (x16)	CPU 2	PE 4	SW2	FHFL dual-width

 Copyright © xFusion Digital Technologies Co., Ltd.

PCIe Riser Card	PCIe Slot	PCIe Slot or Port Description	CPU	PCIe Port No.	Switch	PCIe Device Supported by the PCIe Slot or Port
PCIe riser card supported by I/O module 1	Slot 18	PCIe 5.0 x16 (x16)	CPU 1	PE 0	-	HHHL
	Slot 19	PCIe 5.0 x16 (x16)	CPU 1	PE 2	-	HHHL
	Slot 20	PCIe 5.0 x16 (x16)	CPU 2	PE 0	-	HHHL
	Slot 21	PCIe 5.0 x16 (x16)	CPU 2	PE 2	-	HHHL
PCIe riser card of the built-in riser module	Slot 26	PCIe 4.0 x16 (x8)	CPU 1	PE 1	-	HHHL
-	FlexIO card 1	PCIe 5.0 x 16 (x8, x8+x8[c])	CPU 1	PE 1 (8-15)	-	OCP 3.0 specifications
	FlexIO card 2	PCIe 5.0 x16 (x8)	CPU 2	PE 1 (0 to 7)	-	OCP 3.0 specifications
	FlexIO card 3	PCIe 5.0 x16 (x8)	CPU 2	PE 1 (8-15)	-	OCP 3.0 specifications

 Copyright © xFusion Digital Technologies Co., Ltd.

PCIe Riser Card	PCIe Slot	PCIe Slot or Port Description	CPU	PCIe Port No.	Switch	PCIe Device Supported by the PCIe Slot or Port
● a: PCIe 5.0 refers to the PCIe of the fifth generation, and x16 refers to the physical slot width. This also applies to the content below. ● b: The x16 in bracket indicates that the link bandwidth is x16. This also applies to the content below. ● c: FlexIO card 1 can be redirected through a cable. FlexIO card 1 supports Multi-host function. ● The PCIe x16 slots are compatible with PCIe x16, PCIe x8, PCIe x4, and PCIe x1 cards. That is, the PCIe slot width cannot be smaller than the PCIe card link width. ● The FHFL PCIe slots are compatible with FHFL PCIe cards, FHHL PCIe cards, and HHHL PCIe cards. ● The maximum power supply of each PCIe slot is 75 W.						

- Configuration with 20 x 2.5" drives + 10 x dual-width GPUs + 1 switch board

Table 5-16 PCIe slot description

PCIe Riser Card	PCIe Slot	PCIe Slot or Port Description	CPU	PCIe Port No.	Switch	PCIe Device Supported by the PCIe Slot or Port
PCIe Riser Card Supported by the Rear GPU Module	Slot 1	PCIe 5.0 x16[a] (x16)[b]	CPU 1	PE 1	SW1	FHFL dual-width
	Slot 3	PCIe 5.0 x16 (x16)	CPU 1	PE 1	SW1	FHFL dual-width
	Slot 5	PCIe 5.0 x16 (x16)	CPU 1	PE 1	SW1	FHFL dual-width
	Slot 7	PCIe 5.0 x16 (x16)	CPU 1	PE 1	SW1	FHFL dual-width

 Copyright © xFusion Digital Technologies Co., Ltd.

PCIe Riser Card	PCIe Slot	PCIe Slot or Port Description	CPU	PCIe Port No.	Switch	PCIe Device Supported by the PCIe Slot or Port
	Slot 10	PCIe 5.0 x16 (x16)	CPU 2	PE 4	SW2	FHFL dual-width
	Slot 12	PCIe 5.0 x16 (x16)	CPU 2	PE 4	SW2	FHFL dual-width
	Slot 14	PCIe 5.0 x16 (x16)	CPU 2	PE 4	SW2	FHFL dual-width
	Slot 16	PCIe 5.0 x16 (x16)	CPU 2	PE 4	SW2	FHFL dual-width
PCIe riser card supported by I/O module 1	Slot 18	PCIe 5.0 x16 (x16)	CPU 1	PE 0	-	HHHL
	Slot 19	PCIe 5.0 x16 (x16)	CPU 1	PE 2	-	HHHL
	Slot 20	PCIe 5.0 x16 (x16)	CPU 2	PE 0	-	HHHL
	Slot 21	PCIe 5.0 x16 (x16)	CPU 2	PE 2	-	HHHL
PCIe riser card of the built-in riser module	Slot 26	PCIe 4.0 x16 (x8)	CPU 1	PE 1	-	HHHL
PCIe riser card supported by the front GPU module	Slot 23	PCIe 5.0 x16 (x16)	CPU 1	PE 1	SW1	FHFL dual-width
	Slot 25	PCIe 5.0 x16 (x16)	CPU 2	PE 3	SW2	FHFL dual-width

 Copyright © xFusion Digital Technologies Co., Ltd.

PCIe Riser Card	PCIe Slot	PCIe Slot or Port Description	CPU	PCIe Port No.	Switch	PCIe Device Supported by the PCIe Slot or Port
-	FlexIO card 1	PCIe 5.0 x16 (x8, x8+x8[c])	CPU 1	PE 1 (8-15)	-	OCP 3.0 specifications
	FlexIO card 2	PCIe 5.0 x16 (x8)	CPU 2	PE 1 (8-15)	-	OCP 3.0 specifications
	FlexIO card 3	PCIe 5.0 x16 (x8)	CPU 2	PE 1 (0 to 7)	-	OCP 3.0 specifications

- a: PCIe 5.0 refers to the PCIe of the fifth generation, and x16 refers to the physical slot width. This also applies to the content below.
- b: The x16 in bracket indicates that the link bandwidth is x16. This also applies to the content below.
- c: FlexIO card 1 can be redirected through a cable. FlexIO card 1 supports Multi-host function.
- The PCIe x16 slots are compatible with PCIe x16, PCIe x8, PCIe x4, and PCIe x1 cards. That is, the PCIe slot width cannot be smaller than the PCIe card link width.
- The FHFL PCIe slots are compatible with FHFL PCIe cards, FHHL PCIe cards, and HHHL PCIe cards.
- The maximum power supply of each PCIe slot is 75 W.

- 24 x 3.5" drives + 8 x dual-width GPU pass-through model configuration

Table 5-17 PCIe slot description

PCIe Riser Card	PCIe Slot	PCIe Slot or Port Description	CPU	PCIe Port No.	PCIe Device Supported by the PCIe Slot or Port
PCIe Riser Card Supported by the Rear GPU Module	Slot 1	PCIe 5.0 x16[a] (x16)[b]	CPU 1	PE 1	FHFL dual-width
	Slot 3	PCIe 5.0 x16 (x16)	CPU 1	PE 1	FHFL dual-width

 Copyright © xFusion Digital Technologies Co., Ltd.

PCIe Riser Card	PCIe Slot	PCIe Slot or Port Description	CPU	PCIe Port No.	PCIe Device Supported by the PCIe Slot or Port
	Slot 5	PCIe 5.0 x16 (x16)	CPU 1	PE 1	FHFL dual-width
	Slot 7	PCIe 5.0 x16 (x16)	CPU 1	PE 1	FHFL dual-width
	Slot 9	PCIe 5.0 x16 (x8)	CPU 2	PE 1	HHHL
	Slot 10	PCIe 5.0 x16 (x16)	CPU 2	PE 4	FHFL dual-width
	Slot 12	PCIe 5.0 x16 (x16)	CPU 2	PE 4	FHFL dual-width
	Slot 14	PCIe 5.0 x16 (x16)	CPU 2	PE 4	FHFL dual-width
	Slot 16	PCIe 5.0 x16 (x16)	CPU 2	PE 4	FHFL dual-width
PCIe riser card of the built-in riser module	Slot 26	PCIe 4.0 x16 (x8)	CPU 1	PE 1	HHHL
-	FlexIO card 1	PCIe 5.0 x16 (x8, x8+x8[c])	CPU 1	PE 1 (8-15)	OCP 3.0 specifications
	FlexIO card 3	PCIe 5.0 x16 (x8)	CPU 2	PE 1 (8-15)	OCP 3.0 specifications

- a: PCIe 5.0 refers to the PCIe of the fifth generation, and x16 refers to the physical slot width. This also applies to the content below.
- b: The x16 in bracket indicates that the link bandwidth is x16. This also applies to the content below.
- c: FlexIO card 1 can be redirected through a cable. FlexIO card 1 supports Multi-host function.
- The PCIe x16 slots are compatible with PCIe x16, PCIe x8, PCIe x4, and PCIe x1 cards. That is, the PCIe slot width cannot be smaller than the PCIe card link width.
- The FHFL PCIe slots are compatible with FHFL PCIe cards, FHHL PCIe cards, and HHHL PCIe cards.
- The maximum power supply of each PCIe slot is 75 W.

 Copyright © xFusion Digital Technologies Co., Ltd.

Server Bus/Device/Function Number (B/D/F) Information

The B/D/F information of the server may change with PCIe card configurations. You can obtain the B/D/F information of the server using the following methods:

- BIOS serial port log: If the serial port log has been collected, you can query the B/D/F information of the server by searching for the keyword **dumpiio**.
- UEFI Shell: You can obtain the B/D/F of the server running the **pci** command. Run the **help pci** command to obtain the specific usage of the **pci** command.
- The following describes how to obtain the B/D/F information on different OSs.
  - Linux OS: You can obtain the B/D/F information of the server running the **lspci -vvv** command.

    NOTE

    If the OS does not support the **lspci** command by default, obtain the **pci-utils** package from the **yum** source and install it to make the OS support the command.
  - Windows OS: After installing the **pci-utils** package, run the **lspci** command to obtain the B/D/F information of the server.
  - VMware OS: The **lspci** command is supported by default. You can directly obtain the B/D/F information of the server running the **lspci** command.

5.8 PSUs

- The server supports a maximum of four PSUs.
- The server supports AC PSUs.
- The PSUs support hot swap.
- The PSUs support 2+2 redundancy or 3+1 redundancy when four PSU are configured.
- PSUs of the same P/N code must be used in a server.
- The PSUs are protected against short circuit. Double-pole fuse is provided for the PSUs with dual input live wires.
- Power consumption parameters vary with server configurations (including ErP-standard configurations). For details, see **FusionServer Servers Power Calculator**.
- For details about the optional components, consult your local sales representative or see "Search Parts" in the **Compatibility Checker**.

Figure 5-26 Positions of PSUs

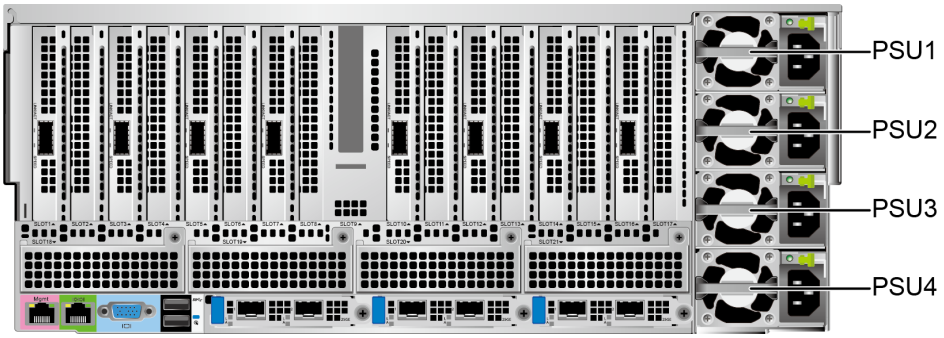

5.9 Fan Modules

- Four fan modules are supported. Each fan module contains two layers of fans. Six or eight fans can be provided.
  - Six fans are required for the 24 x 3.5" drive configuration.
  - Eight fans are required for the 20 x 2.5" drive configuration.
- The PSUs support hot swap.
- N+1 redundancy is supported. That is, the server can work properly when a single fan fails.
- The fan speed can be adjusted.
- Fan modules of the same P/N code must be used in a server.

Figure 5-27 Positions of fan modules of a server with 24 x 3.5" drives (example)

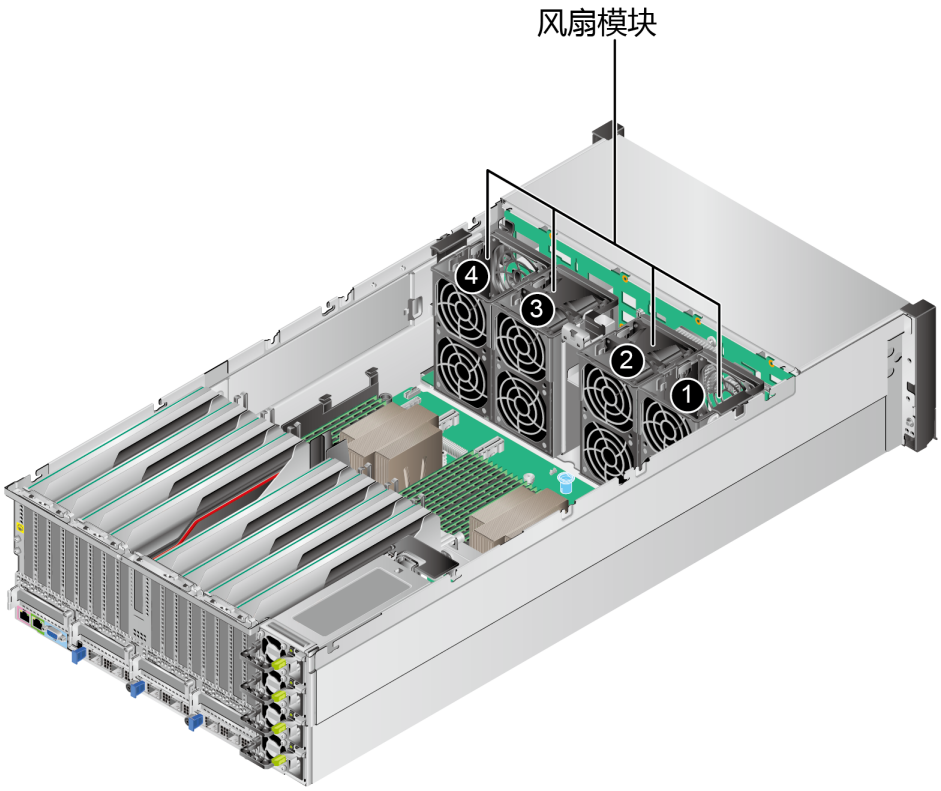

5.10 Boards

5.10.1 Mainboard

Figure 5-28 Mainboard

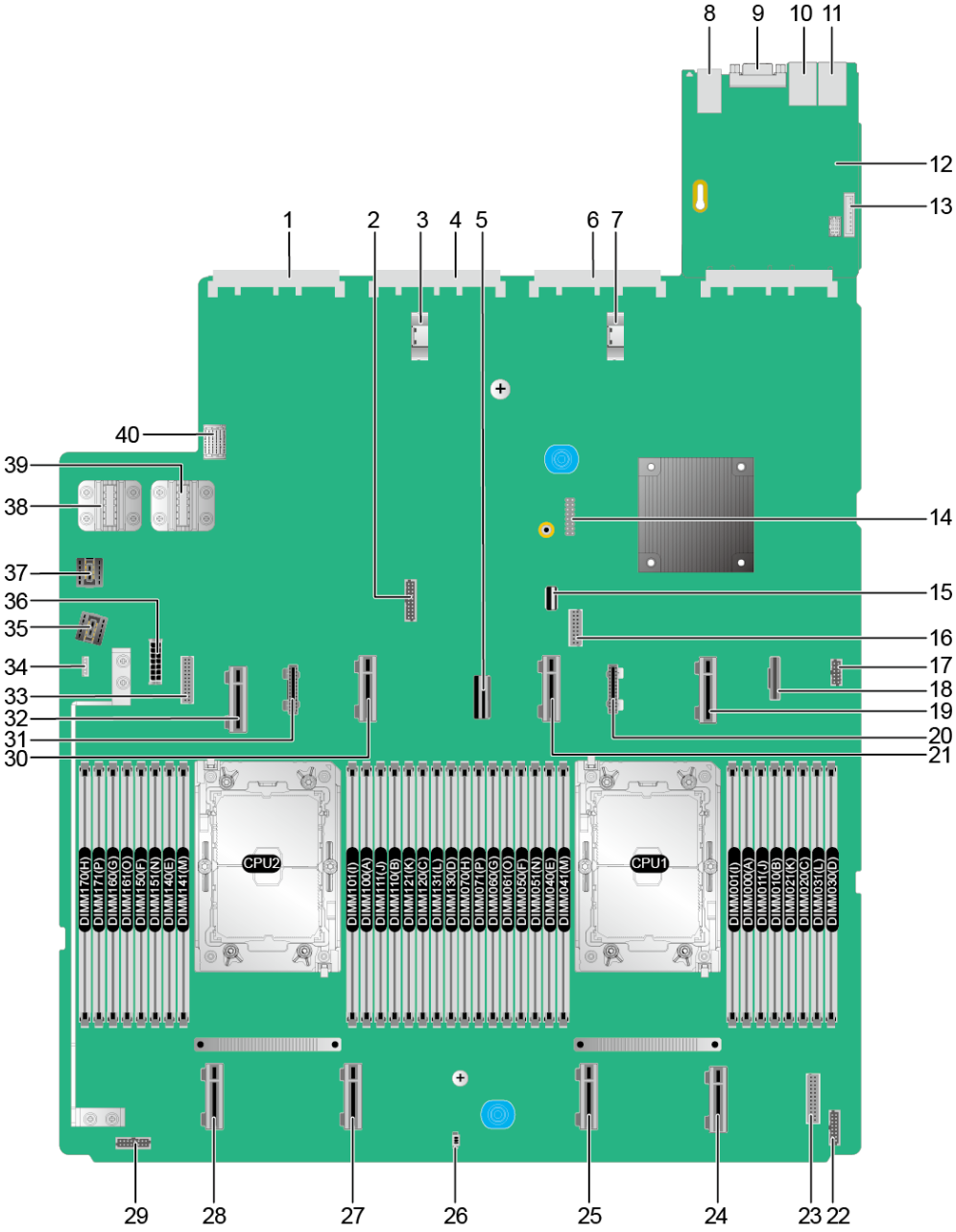

1	OCP 3.0 NIC 3 connector (OCP3 CONN/J7023)	2	RAID controller card low-speed signal connector (RAID MIS/J7017)
3	OCP 3.0 NIC 2 UBC connector (UBC2-2B/ J6071)	4	OCP 3.0 NIC 2 connector (OCP2 CONN/J7016)

 Copyright © xFusion Digital Technologies Co., Ltd.

5	Rear I/O board low-speed signal connector (BACK IO BOARD/J7000)	6	OCP 3.0 NIC 1 connector (OCP1 CONN/J7014)
7	OCP 3.0 NIC 1 UBC connector (UBC2-2A/J42)	8	2 x USB 3.0 ports (USB3.0 CONN/J88)
9	Rear VGA port (VGA CONN/J60)	10	Serial port (COM/J6020)
11	BMC management port (BMC_GE/J6019)	12	BMC management board
13	LCD connector (LCD CONN/J6025)[a]	14	TPM/TCM connector (J6065)
15	Built-in USB 3.0 connector (INNER USB3.0/J6067)	16	M.2 low-speed signal connector (M.2 MIS/J61)
17	NC-SI connector (NCSI CONN/J7013)	18	PCH SATA port A&B connector (PORT(A-B)/ J7009)
19	CPU 1 UBC DD connector (UBCDD 1-1/J64)	20	RAID controller card UBC connector (UBC 1-2/J6051)
21	CPU 1 UBC DD connector (UBCDD 1-3/J6052)	22	Fan board signal connector (FAN BOARD/J7022)
23	Right mounting ear connector (R_EAR BOARD/J7012)	24	CPU 1 UBC DD connector (UBCDD 1-5/J37)
25	CPU 1 UBC DD connector (UBCDD 1-4/J49)	26	Intrusion sensor connector (INTRUDER/S2)
27	CPU 2 UBC DD connector (UBCDD 2-5/J45)	28	CPU 2 UBC DD connector (UBCDD 2-4/J41)
29	Drive backplane low-speed signal connector (FRONT HDD BP/J6082)	30	CPU 2 UBC DD connector (UBCDD 2-1/J6053)
31	UBC2 straight connector (UBC 2-2/J6054)	32	CPU 2 UBC DD connector (UBCDD 2-3/J53)
33	Left mounting ear connector (L_EAR BOARD/ J7003)	34	VROC key connector (VROC KEY/J6066)
35	Fan board power connector 1 (FAN PWR_1/J7010)	36	Fan board power connector 2 (FAN PWR_2/ J7006)
37	PSU backplane input power connector (PWR IN/ J6093)	38	Copper bar power connector (PWR GND/ J7008)

 Copyright © xFusion Digital Technologies Co., Ltd.

39	Copper bar power connector (PWR 12V_IN/ J7007)	40	PSU backplane power connector (PDB MIS CONN/J7005)
a: Reserved and unavailable currently.			

5.10.2 Drive Backplane

Front-Drive Backplane

- 24 x 3.5" drive configuration backplane

  All configurations in section **5.5.1.1 24 x 3.5" Drive Configuration** support this backplane.

Figure 5-29 24 x 3.5" drive backplane (16 x SAS/SATA drives + 8 x NVMe/SAS/ SATA drives)

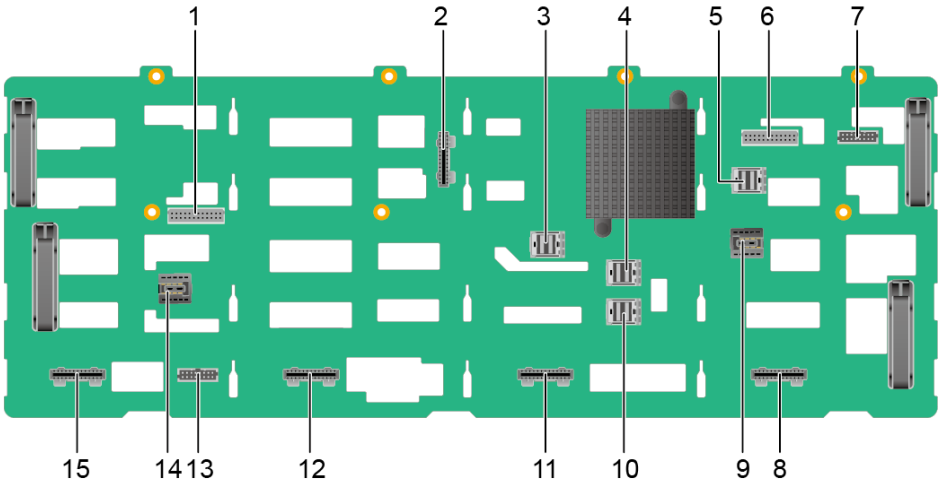

1	Low-speed signal connector (REAR BP0/ J37)	2	UBC high-speed signal connector (J1)
3	mini-SAS HD connector (REAR BP PORTA/J34)	4	mini-SAS HD connector (REAR BP PORTB/J35)
5	mini-SAS HD connector (REAR BP0/1 J33)	6	Low-speed signal connector (REAR BP1/ J38)
7	Low-speed signal connector (MAIN BOARD/J40)	8	UBC 4 high-speed connector (J5)
9	Power connector (24HDD POWER MAINBOARD/ J42)	10	mini-SAS HD connector (REAR BP PORTC/J36)

 Copyright © xFusion Digital Technologies Co., Ltd.

11	UBC 3 high-speed connector (J4)	12	UBC 2 high-speed connector (J3)
13	Low-speed signal connector (REAR BP/ J39)	14	Power connector (POWER REAR BP/J43)
15	UBC 1 high-speed connector (J2)	-	-

- 20 x 2.5" drive switch model configuration backplane

  All configurations in section **5.5.1.2 20 x 2.5" Drive Configuration** support this backplane.

Figure 5-30 20 x 2.5" pass-through configuration backplane

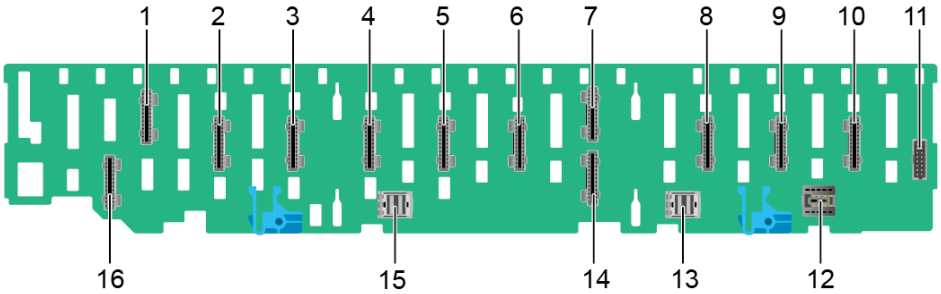

1	UBC connector 1-E (UBC1-E/J11)	2	UBC connector 1-D (UBC1-D/J10)
3	UBC connector 1-C (UBC1-C/J9)	4	UBC connector 1-B (UBC1-B/J8)
5	UBC connector 1-A (UBC1-A/J7)	6	UBC connector 2-F (UBC2-F/J6)
7	UBC connector 2-E (UBC2-E/J5)	8	UBC connector 2-C (UBC2-C/J3)
9	UBC connector 2-B (UBC2-B/J2)	10	UBC connector 2-A (UBC2-A/J1)
11	Backplane signal cable connector (HDD BP/J40)	12	Power connector (HDD_POWER/J41)
13	mini-SAS HD connector (PORT A/J13)	14	UBC connector 2-D (UBC2-D/J4)
15	mini-SAS HD connector (PORT B/J14)	16	UBC connector 1-F (UBC1-F/J12)

 Copyright © xFusion Digital Technologies Co., Ltd.

5.10.3 Fan Board

Figure 5-31 Fan board

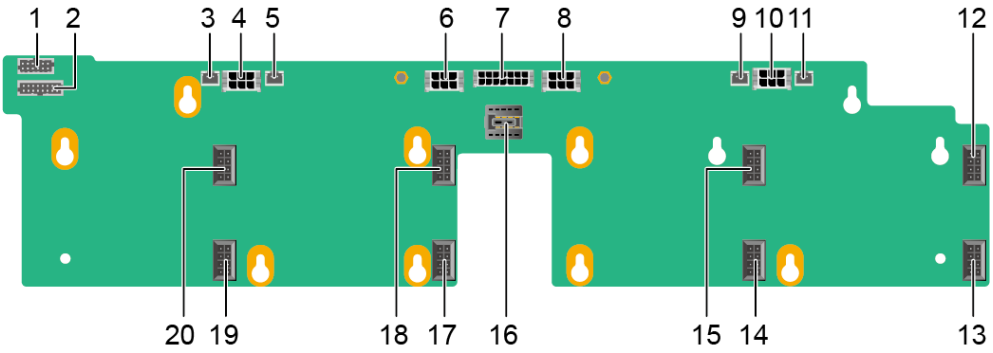

1	LAAC JTAG connector (LAAC JTAG/J17)	2	Fan board signal connector (MISC CONN/J3)
3	Water detection cable presence detection connector (LIQ PRES1/J19)[a]	4	LAAC connector (LAAC4/J16)
5	Water detection cable leakage detection connector (LIQ LEAK1/J18)[a]	6	LAAC connector (LAAC3/J15)
7	Fan board power connector 2 (POWER CONN2/J2)	8	LAAC connector (LAAC2/J14)
9	Water detection cable presence detection connector (LIQ PRES2/J21)[a]	10	LAAC connector (LAAC1/J13)
11	Water detection cable leakage detection connector (LIQ LEAK2/J20)[a]	12	Fan connector (FAN1A/J5)
13	Fan connector (FAN1B/J7)	14	Fan connector (FAN2B/J8)
15	Fan connector (FAN2A/J6)	16	Fan board power connector 1 (POWER CONN1/J4)
17	Fan connector (FAN3B/J11)	18	Fan connector (FAN3A/J9)
19	Fan connector (FAN4B/J12)	20	Fan connector (FAN4A/J10)

Copyright © xFusion Digital Technologies Co., Ltd.

a: Reserved and unavailable currently.

5.10.4 PSU Backplane

Figure 5-32 PSU backplane

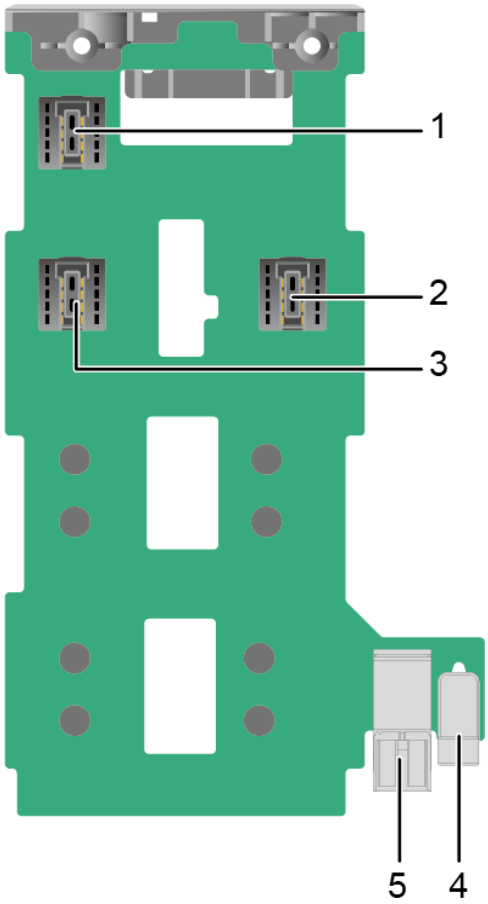

1	Power connector (HDD BP/J100)	2	Power connector (RSW-2&MB/J102)
3	Power connector (RSW-1&RISER/J101)	4	Guide sleeve (J108)
5	Spurious signal connector (J103)	-	-

 Copyright © xFusion Digital Technologies Co., Ltd.

5.10.5 PCIe Switch Board

Figure 5-33 PCIe switch board

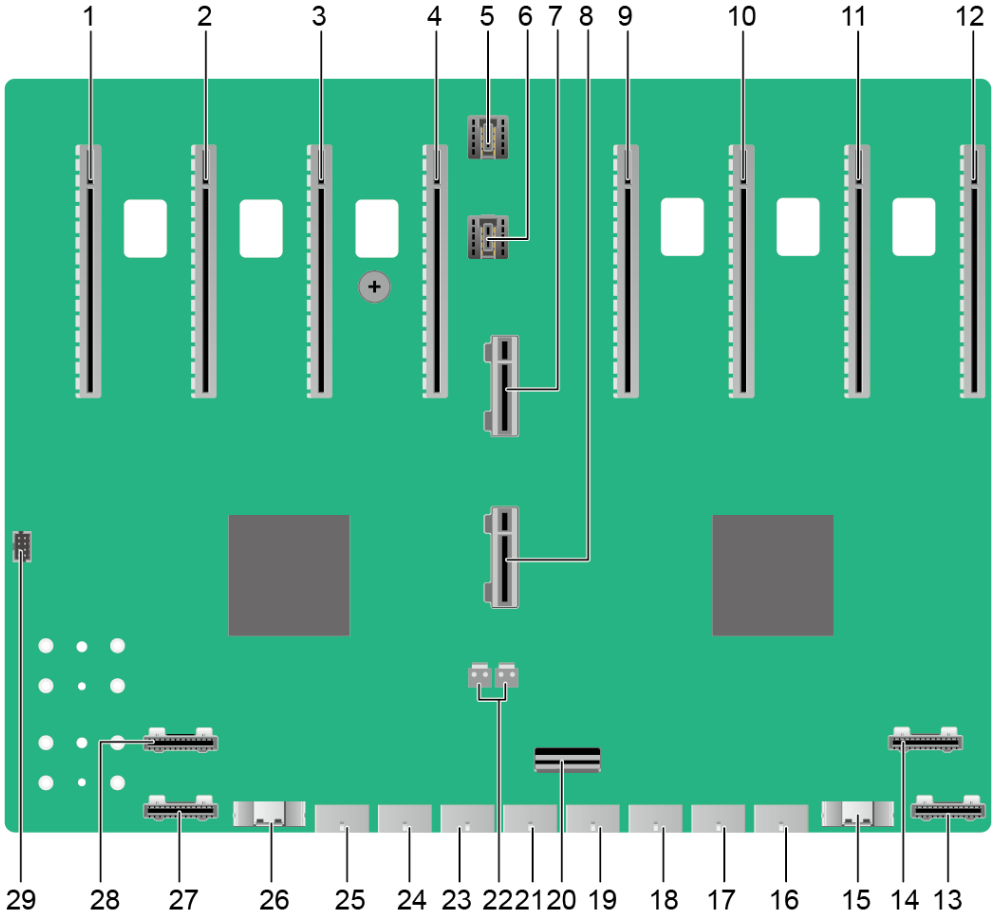

1	CEM connector (PCIE SLOT16 X16/J18)	2	CEM connector (PCIE SLOT14 X16/J17)
3	CEM connector (PCIE SLOT12 X16/J16)	4	CEM connector (PCIE SLOT10 X16/J15)
5	Power connector (PWR CON1/J121)	6	Power connector (PWR CON2/J122)
7	UBCDD high-speed connector (UBCDD1-1/ J133)	8	UBCDD high-speed connector (UBCDD2-1/ J134)
9	CEM connector (PCIE SLOT7 X16/J14)	10	CEM connector (PCIE SLOT5 X16/J13)
11	CEM connector (PCIE SLOT3 X16/J12)	12	CEM connector (PCIE SLOT1 X16/J11)
13	UBC high-speed connector (UBC1-5B/J137)	14	UBC high-speed connector (UBC1-5A/J136)

 Copyright © xFusion Digital Technologies Co., Ltd.

15	UBC high-speed connector (UBC6-HDDBP/J140)	16	GPU power connector (GPU PWR CONN1/J111)
17	GPU power connector (GPU PWR CONN3/J112)	18	GPU power connector (GPU PWR CONN5/J113)
19	GPU power connector (GPU PWR CONN7/J114)	20	Low-speed signal connector (MISC CONN/ J102)
21	GPU power connector (GPU PWR CONN10/J115)	22	Power connector (BACK_RISER1/2_PWR/ J119/J120)
23	GPU power connector (GPU PWR CONN12/J116)	24	GPU power connector (GPU PWR CONN14/J117)
25	GPU power connector (GPU PWR CONN16/J118)	26	UBC high-speed connector (UBC5-HDDBP/J141)
27	UBC high-speed connector (UBC2-4A/J139)	28	UBC high-speed connector (UBC2-4B/J138)
29	Low-speed signal connector (DPU/J144)	-	-

 Copyright © xFusion Digital Technologies Co., Ltd.

5.10.6 PCIe Pass-Through Board

Figure 5-34 PCIe pass-through board

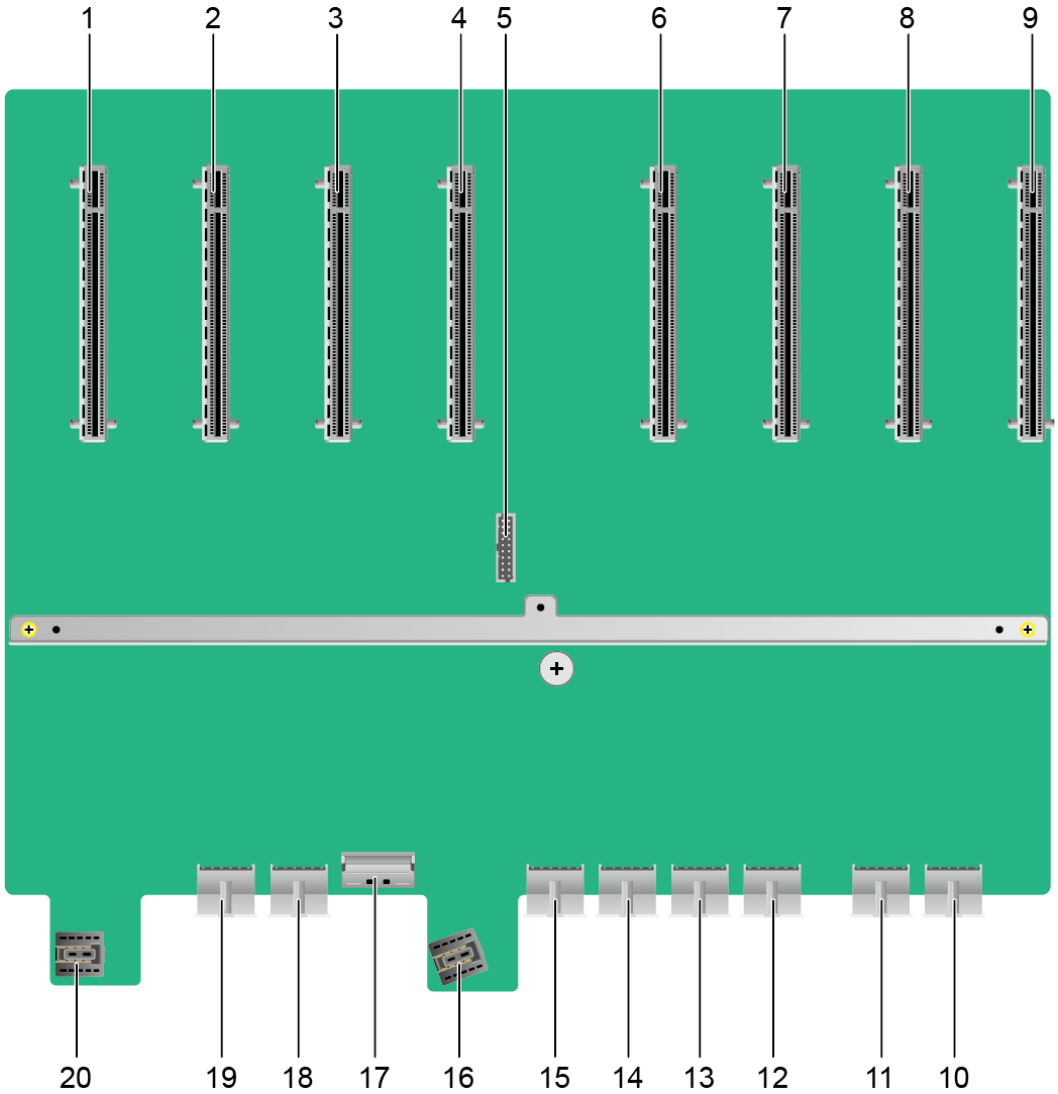

1	CEM connector 8 (PCIE SLOT16 x16 (UBCDD2-4)/ J17)	2	CEM connector 7 (PCIE SLOT14 x16 (UBCDD2-5)/ J16)
3	CEM connector 6 (PCIE SLOT10 x16 (UBCDD2-3)/ J15)	4	CEM connector 5 (PCIE SLOT10 x16 (UBCDD2-1)/ J14)
5	Spurious connector for the riser card (MISC SLOT9/J1)	6	CEM connector 4 (PCIE SLOT7 x16 (UBCDD1-3)/ J13)
7	CEM connector 3 (PCIE SLOT5 x16 (UBCDD1-1)/ J12)	8	CEM connector 2 (PCIE SLOT3 x16 (UBCDD1-4)/ J11)

 Copyright © xFusion Digital Technologies Co., Ltd.

9	CEM connector 1 (PCIE SLOT1 x16 (UBCDD1-5)/ J10)	10	GPU power cable connector 1 (GPU PWR CONN1/J110)
11	GPU power cable connector 2 (GPU PWR CONN3/J111)	12	GPU power cable connector 3 (GPU PWR CONN5/J112)
13	GPU power cable connector 4 (GPU PWR CONN7/J113)	14	GPU power cable connector 5 (GPU PWR CONN10/J114)
15	GPU power cable connector 6 (GPU PWR CONN12/J115)	16	Power connector (PWR CONN1/J3)
17	Spurious connector for the BIOA board (MISC CONN/ J102)	18	GPU power cable connector 7 (GPU PWR CONN14/J116)
19	GPU power cable connector 8 (GPU PWR CONN16/J117)	20	Power connector (PWR CONN2/J4)

5.10.7 M.2 SSD Adapter Board

Figure 5-35 M.2 adapter board

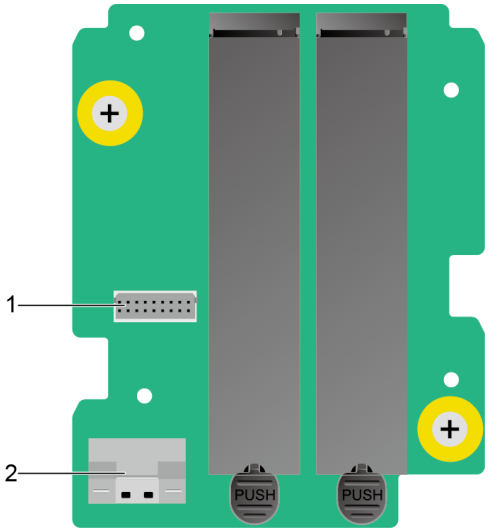

1	Signal connector (J1)	2	High-speed connector (J2)

 Copyright © xFusion Digital Technologies Co., Ltd.

6 Product Specifications

6.1 Technical Specifications

6.2 Environmental Specifications

6.3 Physical Specifications

6.1 Technical Specifications

Table 6-1 Technical specifications

Category	Specification
Form factor	4U GPU server
Chipset	Emmitsburg PCH
Processor	Supports two processors. ● The new generation of Intel® Xeon® Scalable processors (Sapphire Rapids). ● Built-in memory controller and eight DIMM channels per processor. ● Built-in PCIe controller, supporting PCIe 5.0 and 80 lanes per processor. ● Four UltraPath Interconnect (UPI) buses between processors, providing up to 16 GT/s transmission per channel. ● Up to 60 cores. ● Max. 4.1 GHz frequency. ● Min. 1.875 MB L3 cache per core. ● Max. 350 W thermal design power (TDP). **NOTE** The preceding information is for reference only. For details, see "Search Parts" in the **Compatibility Checker**.

 Copyright © xFusion Digital Technologies Co., Ltd.

Category	Specification
Memory	● Up to 32 DDR5 DIMMs. 32 memory slots. – RDIMM or RDIMM-3DS supported. – Max. 4800 MT/s memory speed. – DDR5 memory modules of different types (RDIMM and RDIMM-3DS) and specifications (capacity, bit width, rank, and height) cannot be used together. – A server must use DDR5 DIMMs of the same P/N code. **NOTE** The preceding information is for reference only. For details, see "Search Parts" in the **Compatibility Checker**.

 Copyright © xFusion Digital Technologies Co., Ltd.

Category	Specification
Storage	Supports a variety of drive configurations. For details, see **5.5.1 Drive Configuration and Drive Numbering**. ● Supports two M.2 SSDs. – M.2 SSDs are supported for VROC (SATA RAID) configuration when the server is configured with an M.2 SSD adapter card. **NOTE** ● The M.2 SSD is used only as a boot device for installing the OS. Small-capacity (32 GB or 64 GB) M.2 SSDs do not support logging due to poor endurance. If a small-capacity M.2 SSD is used as the boot device, a dedicated log drive or log server is required for logging. For example, you can dump VMware logs in either of the following ways: ● Redirect **/scratch**. For details, see **https://kb.vmware.com/s/article/1033696**. ● Configure syslog. For details, see **https://kb.vmware.com/s/article/2003322**. ● The M.2 SSD cannot be used to store service data due to poor endurance. In write-intensive applications, the M.2 SSD will wear out in a short time. If you want to use SSDs or HDDs as data storage devices, use enterprise-level SSDs or HDDs with high DWPD. ● The M.2 SSD is not recommended for write-intensive service software due to poor endurance. ● Do not use M.2 SSDs for cache. ● Supports hot swap of SAS/SATA/NVMe U.2 drives. **NOTE** When NVMe drives are configured, note the following: ● Before using the VMD function, contact technical support engineers of the OS vendor to check whether the OS supports the VMD function. If yes, check whether the VMD driver needs to be manually installed and check the installation method. ● If the VMD function is enabled and the latest VMD driver is installed, the NVMe drives support surprise hot swap. ● If the VMD function is disabled, the NVMe drives support orderly hot swap. ● Supports multiple types of RAID controller cards. For details, see "Search Parts" in the **Compatibility Checker**. – The RAID controller card supports RAID configuration, RAID level migration, and drive roaming. – The RAID controller card supports a supercapacitor for power-off protection to ensure user data security. – The PCIe plug-in RAID controller card occupies one PCIe slot.

 Copyright © xFusion Digital Technologies Co., Ltd.

Category	Specification
	For details about the RAID controller card, see the ***V7 Server RAID Controller Card User Guide***. **NOTE** If the BIOS is in legacy mode, the 4K drive cannot be used as the boot drive.
Network	OCP 3.0 NICs provide network expansion capabilities. ● Three or two OCP3.0 NICs can be configured. If two OCP3.0 NICs are configured, OCP 3.0 1 supports the Multi-Host function. ● Supports orderly hot swap. **NOTE** The OCP 3.0 NIC supports orderly hot swap only when the VMD function is disabled. ● Supports a variety of OCP 3.0 NICs. For details, see "Search Parts" in the **Compatibility Checker**.
I/O expansion	● 24 x 3.5" drive switch model provides 16 PCIe slots including: – Eight GPU slots. – Four standard NIC slots. – Three OCP 3.0 NIC slots. – One built-in slot for a PCIe plug-in RAID controller card. ● The 20 x 2.5" drive switch model supports 18 PCIe slots including: – 10 GPU slots. – Four standard NIC slots. – Three OCP 3.0 NIC slots. – One built-in PCIe plug-in RAID controller card slot. ● The 24 x 3.5" drive pass-through model supports 12 PCIe slots including: – Eight GPU slots. – One standard NIC slot. – Two OCP 3.0 NIC slots. – One built-in PCIe plug-in RAID controller card slot. For details, see **5.7.2 PCIe Slots** and **5.7.3 PCIe Slot Description**. **NOTE** The preceding information is for reference only. For details, see "Search Parts" in the **Compatibility Checker**.

 Copyright © xFusion Digital Technologies Co., Ltd.

Category	Specification
Ports	Supports a variety of ports. ● Ports on the front panel: – One USB Type-C iBMC direct connect management port – Two USB 3.0 ports – One DB15 VGA port ● Ports on the rear panel: – Two USB 3.0 ports – One DB15 VGA port – One RJ45 serial port – One RJ45 management network port **NOTE** You are not advised to install the OS on the USB storage media.
Video card	An SM750 video chip with 32 MB display memory is integrated on the BMC card. The maximum display resolution is 1920 x 1200 at 60 Hz with 16M colors. **NOTE** ● The integrated video card can provide the maximum display resolution (1920 x 1200) only after the video card driver matching the OS version is installed. Otherwise, only the default resolution supported by the OS is provided. ● If both the front and rear VGA ports are connected to monitors, only the monitor connected to the front VGA port displays information.
System management	● UEFI ● iBMC ● NC-SI ● Integration with third-party management systems
Security feature	● Power-on password ● Administrator password ● TPM (for China and outside China)/TCM (only for China) ● Secure boot ● Front bezel (optional) ● Chassis cover opening detection

 Copyright © xFusion Digital Technologies Co., Ltd.

6.2 Environmental Specifications

Table 6-2 Environmental specifications

Category	Specifications
Temperature	● Operating temperature: 5°C to 35°C (41°F to 95 °F), compliant with ASHRAE Classes A1 and A2 ● Storage temperature (within three months): –30ºC to +60ºC (–22ºF to +140ºF) ● Storage temperature (within six months): –15ºC to +45ºC (5ºF to 113ºF) ● Storage temperature (within one year): –10°C to +35°C (14°F to 95°F) ● Maximum rate of temperature change: 20ºC (36ºF) per hour, and 5ºC (9ºF) per 15 minutes **NOTE** The highest operating temperature varies depending on the server configuration. For details, see **A.3 Operating Temperature Limitations**.
Relative humidity (RH, non-condensing)	● Operating humidity: 8% to 90% ● Storage humidity (within three months): 8% to 85% ● Storage humidity (within six months): 8% to 80% ● Storage humidity (within one year): 20% to 75% ● Maximum rate of humidity change: 20% per hour
Air volume	≥ 330 CFM
Altitude	≤ 3050 m (10,006.56 ft) ● When the server configuration complies with ASHRAE Classes A1 and A2 and the altitude is above 900 m (2952.76 ft), the highest operating temperature decreases by 1°C (1.8°F) for every increase of 300 m (984.24 ft). ● HDDs cannot be used at an altitude of over 3050 m (10,006.56 ft).
Corrosive airborne contaminant	Maximum growth rate of the corrosive product thickness: ● Copper corrosion rate test: 300 Å/month (meeting level G1 requirements of the ANSI/ISA-71.04-2013 standard on gaseous corrosion) ● Silver corrosion rate test: 200 Å/month

 Copyright © xFusion Digital Technologies Co., Ltd.

Category	Specifications
Particle contaminant	● The equipment room environment meets the requirements of ISO 14664-1 Class 8. ● There is no explosive, conductive, magnetic, or corrosive dust in the equipment room. **NOTE** It is recommended that the particulate pollutants in the equipment room be monitored by a professional organization.
Acoustic noise	The declared A-weighted sound power levels (LWAd) and declared average bystander position A-weighted sound pressure levels (LpAm) listed are measured at 23°C (73.4°F) in accordance with ISO 7779 (ECMA 74) and declared in accordance with ISO 9296 (ECMA 109). ● Idle: – LWAd: 6.51 Bels – LpAm: 65.1 dBA ● Operating: – LWAd: 6.62 Bels – LpAm: 49.1 dBA **NOTE** Actual sound levels generated during server operation vary depending on server configuration, load, and ambient temperature.

NOTE

SSDs and HDDs (including NL-SAS, SAS, and SATA) cannot be preserved for a long time in the power-off state. Data may be lost or faults may occur if the preservation duration exceeds the specified maximum duration. When drives are preserved under the storage temperature and humidity specified in the preceding table, the following preservation duration is recommended:

- Maximum preservation duration of SSDs:
  - 12 months in power-off state without data stored
  - 3 months in power-off state with data stored
- Maximum preservation duration of HDDs:
  - 6 months in unpacked/packed and powered-off state
- The maximum preservation duration is determined according to the preservation specifications provided by drive vendors. For details, see the manuals provided by drive vendors.

 Copyright © xFusion Digital Technologies Co., Ltd.

6.3 Physical Specifications

Table 6-3 Physical specifications

Category	Description
Dimension (H x W x D)	175 mm × 447 mm × 898 mm (6.89 in. x 17.60 in. x 35.35 in.) **Figure 6-1** Physical dimensions (example: a chassis with 3.5" drives) 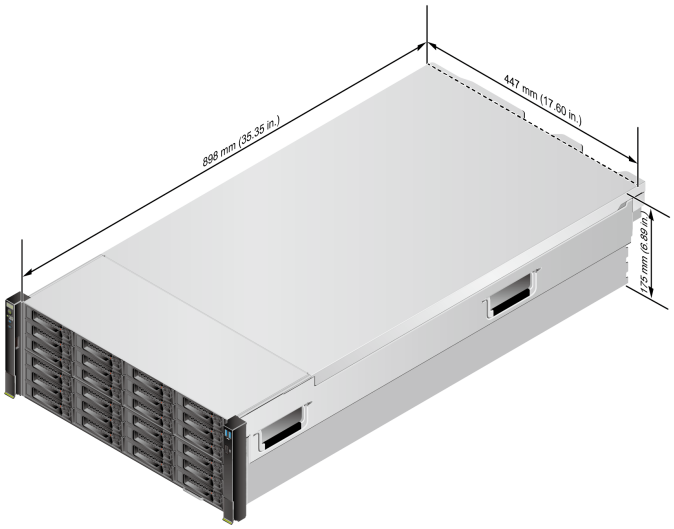 **NOTE** ● See **Figure 6-1** for methods in measuring physical dimensions of the chassis. ● The measuring method for chassis with 3.5" drives and that for chassis with 2.5" drives are the same. The chassis with 3.5" drives is used as an example.
Installation dimension requirements	● Requirements for cabinet installation: Cabinet compliant with the International Electrotechnical Commission (IEC) 297 standard – Width: 482.6 mm (19.00 in.) – Depth: ≥ 1100 mm (43.31 in.) ● Requirements for guide rails installation: – The adjustable L-shaped guide rails apply to cabinets with a distance of 610 mm to 950 mm (24.02 in. to 37.40 in.) between the front and rear mounting bars. – A ball bearing rail kit applies to cabinets with a distance of 609 mm to 950 mm (23.98 in. to 37.40 in.) between the front and rear mounting bars.

 Copyright © xFusion Digital Technologies Co., Ltd.

Category	Description
Fully equipped weight	● Net weight: – Maximum weight of a server with 24 x 3.5" drives: 71 kg (156.53 lb) – Maximum weight of a server with 20 x 2.5" drives: 57 kg (125.66 lb) ● Packing materials: 24 kg (52.91 lb)
Power consumption	Power consumption parameters vary with server configurations (including ErP-standard configurations). For details, see **FusionServer Servers Power Calculator**.

 Copyright © xFusion Digital Technologies Co., Ltd.

7 Software and Hardware Compatibility

For details about the information of the OSs and hardware, see the **Compatibility Checker**.

NOTICE

- If incompatible components are used, the device may be abnormal. Such a fault is beyond the scope of technical support and warranty.
- The performance of servers is closely related to application software, basic middleware software, and hardware. The slight differences of the application software, middleware basic software, and hardware may cause performance inconsistency between the application layer and test software layer.
  - If the customer has requirements on the performance of specific application software, contact technical support to apply for proof of concept (POC) tests in the pre-sales phase to determine detailed software and hardware configurations.
  - If the customer has requirements on hardware performance consistency, specify the specific configuration requirements (for example, specific drive models, RAID controller cards, or firmware versions) in the presales phase.

 Copyright © xFusion Digital Technologies Co., Ltd.

8 Safety Instructions

8.1 Security

8.2 Maintenance and Warranty

8.1 Security

General Statement

- Comply with local laws and regulations when operating devices. These safety instructions are only a supplement.
- The "DANGER", "WARNING", and "CAUTION" information in this document does not represent all the safety instructions, but supplements to the safety instructions.
- Observe all safety instructions provided on the device labels when installing hardware. Follow them in conjunction with these Safety Instructions.
- Operators of special types of work (such as electricians and operators of forklifts) must be certified or authorized by the local government or authority.

WARNING

In a household scenario, operation of this device may cause wireless interference.

Personal Safety

- This device is not suitable for use in places where children may be present.
- Only certified or authorized personnel are allowed to install device.
- Discontinue any dangerous operations and take protective measures. Report anything that could cause personal injury or device damage to a project supervisor.
- Do not move devices or install cabinets and power cables in hazardous weather conditions.

 Copyright © xFusion Digital Technologies Co., Ltd.

- Do not carry the weight that is over the maximum load per person allowed by local laws or regulations. Check the maximum device weight and arrange required personnel.
- Wear clean protective gloves, ESD clothing, a protective hat, and protective shoes, as shown in **Figure 8-1**.

Figure 8-1 Protective clothing

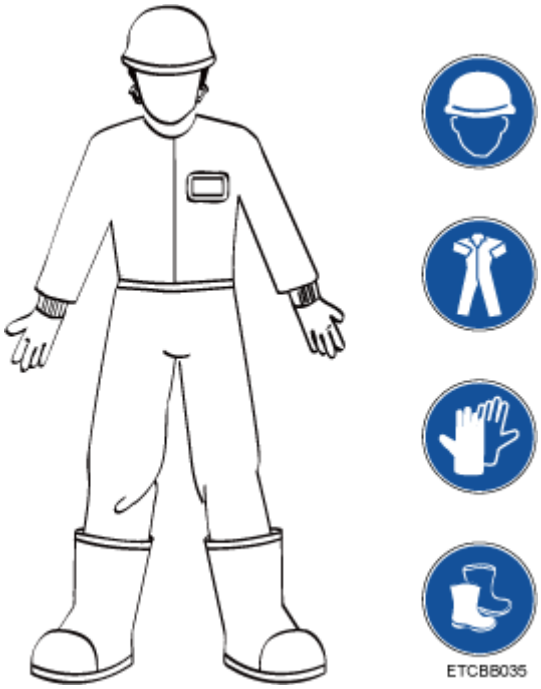

- Before touching a device, wear ESD clothing and gloves (or wrist strap), and remove conductive objects (such as watches and jewelry). **Figure 8-2** shows conductive objects that must be removed before you touch a device.

Figure 8-2 Removing conductive objects

Figure 8-3 shows how to wear an ESD wrist strap.

a. Put your hands into the ESD wrist strap.
b. Fasten the strap buckle and ensure that the ESD wrist strap is in contact with your skin.
c. Insert the ground terminal attached to the ESD wrist strap into the jack on the grounded cabinet or chassis.

 Copyright © xFusion Digital Technologies Co., Ltd.

Figure 8-3 Wearing an ESD wrist strap

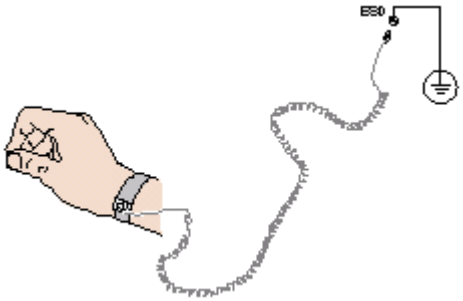

- Exercise caution when using tools.
- If the installation position of a device is higher than the shoulders of the installation personnel, use a vehicle such as a lift to facilitate installation. Prevent the device from falling down and causing personal injury or damage to the device.
- The device is powered by high-voltage power sources. Direct or indirect contact (especially through damp objects) with high-voltage power sources may result in serious injury or death.
- Ground a device before powering it on. Otherwise, high voltage leakage current may cause personal injury.
- When a ladder is used, ensure that another person holds the ladder steady to prevent accidents.
- Do not look into optical ports without eye protection when installing, testing, or replacing optical cables.

Device Security

- Use the recommended power cables at all times.
- Use power cables only for dedicated servers. Do not use them for other devices.
- Use dedicated power cables to ensure equipment and personal safety.
- When moving a device, hold the bottom of the device. Do not hold the handles of the installed modules, such as the PSUs, fan modules, drives, and the mainboard. Handle the device with care.
- Exercise caution to prevent damage to the device when using tools during installation or maintenance.
- Connect the primary and secondary power cables to different power distribution units (PDUs) to ensure reliable device operation.
- Ground a device before powering it on. Otherwise, high voltage leakage current may cause device damage.

Transportation Precautions

Improper transportation may damage device. Contact the manufacturer for precautions before attempting transportation.

Transportation precautions include but are not limited to:

- The logistics company engaged to transport the device must be reliable and comply with international standards for transporting electronics. Ensure that the

 Copyright © xFusion Digital Technologies Co., Ltd.

device being transported is always kept upright. Take necessary precautions to prevent collisions, corrosion, package damage, damp conditions, and pollution.

- Transport each device in its original packaging.
- If the original packaging is unavailable, package heavy, bulky parts (such as chassis and blades) and fragile parts (such as PCIe cards and optical modules) separately.

  NOTE

  For details about components supported by the server, see "Component Compatibility" in the **Compatibility Checker**.

- Ensure that all devices are powered off before transportation.

Maximum Weight Carried by a Person

CAUTION

The maximum weight allowed to be carried by a person is subject to local laws or regulations. The markings on the device and the descriptions in the documentation are for reference only.

Table 8-1 lists the maximum weight a person is permitted to carry as stipulated by a number of organizations.

Table 8-1 Maximum weight carried per person

Organization	Weight (kg/lb)
European Committee for Standardization (CEN)	25/55.13
International Organization for Standardization (ISO)	25/55.13
National Institute for Occupational Safety and Health (NIOSH)	23/50.72
Health and Safety Executive (HSE)	25/55.13
General Administration of Quality Supervision, Inspection and Quarantine of the People's Republic of China (AQSIQ)	• Male: 15/33.08 • Female: 10/22.05

For more information about safety instructions, see ***Server Safety Information***.

8.2 Maintenance and Warranty

For details about the maintenance policy, visit **Customer Support Service**.

 Copyright © xFusion Digital Technologies Co., Ltd.

For details about the warranty policy, visit **Warranty**.

 Copyright © xFusion Digital Technologies Co., Ltd.

9 System Management

The server the new-generation Intelligent Baseboard Management Controller (iBMC), which complies with Intelligent Platform Management Interface 2.0 (IPMI 2.0) specifications and provides highly reliable hardware monitoring and management.

The iBMC supports the following features and protocols:

- Various management interfaces

  The iBMC provides the following standard interfaces to meet various system integration requirements:
  - DCMI 1.5 interface
  - IPMI 1.5/IPMI 2.0 interface
  - Command-line interface
  - Redfish interface
  - Hypertext Transfer Protocol Secure (HTTPS)
  - Simple Network Management Protocol (SNMP)
- Fault monitoring and diagnosis

  Faults can be detected and rectified in advance to ensure 24/7 stable running of the device.
  - The iBMC allows screenshots and videos to be created when the system breaks down, facilitating cause analysis of the system breakdown.
  - The iBMC offers screen snapshots and videos, simplifying routine preventive maintenance, recording, and auditing.
  - The fault diagnose management (FDM) function supports component-based precise fault diagnosis, facilitating component fault locating and replacement.
  - The iBMC supports the reporting of alarms through syslog packets, trap packets, and emails, helping the upper-layer NMS to collect the fault information about the server.
  - If the server is configured with the LCD module, the LCD can directly obtain device information from the iBMC.
- Security management
  - Software image backup improves system security. Even if the running software breaks down, the system can be started from the backup image.

 Copyright © xFusion Digital Technologies Co., Ltd.

  - Diversified user security control interfaces are provided to ensure user login security.
  - Multiple types of certificates can be imported and replaced to ensure data transmission security.
- System maintenance interface
  - The virtual KVM and virtual media functions facilitate remote maintenance.
  - Out-of-band RAID monitoring and configuration are supported to improve RAID configuration efficiency and management capability.
  - Smart Provisioning provides a convenient operation interface for installing the OS, configuring RAID, and performing the upgrade without a CD-ROM.
- Various network protocols
  - The NTP synchronizes network time to optimize time configuration.
  - The iBMC supports domain name system (DNS) and Lightweight Directory Application Protocol (LDAP) to implement domain management and directory service.
- Intelligent power management
  - The power capping technology helps you easily improve deployment density.
  - The iBMC uses dynamic power saving to reduce operational expenditure (OPEX).
- License Management

  By managing licenses, you can use the features of the iBMC advanced edition in authorization mode.

  Compared with the standard edition, the iBMC advanced edition provides more advanced features, such as:
  - Implements the OS deployment using Redfish.
  - Collect the original data of intelligent diagnosis using Redfish.

 Copyright © xFusion Digital Technologies Co., Ltd.

10 Certifications

Country/Region	Certification	Standard
China	CCC	GB 4943.1-2022 GB/T 9254.1-2021(Class A) GB 17625.1-2022

 Copyright © xFusion Digital Technologies Co., Ltd.

11 Waste Product Recycling

If product users need product recycling service provided by xFusion after products are scrapped, contact technical support for services.

 Copyright © xFusion Digital Technologies Co., Ltd.

A Appendix

A.1 Chassis Label Information

A.1.1 Chassis Head Label

Figure A-1 Chassis head label

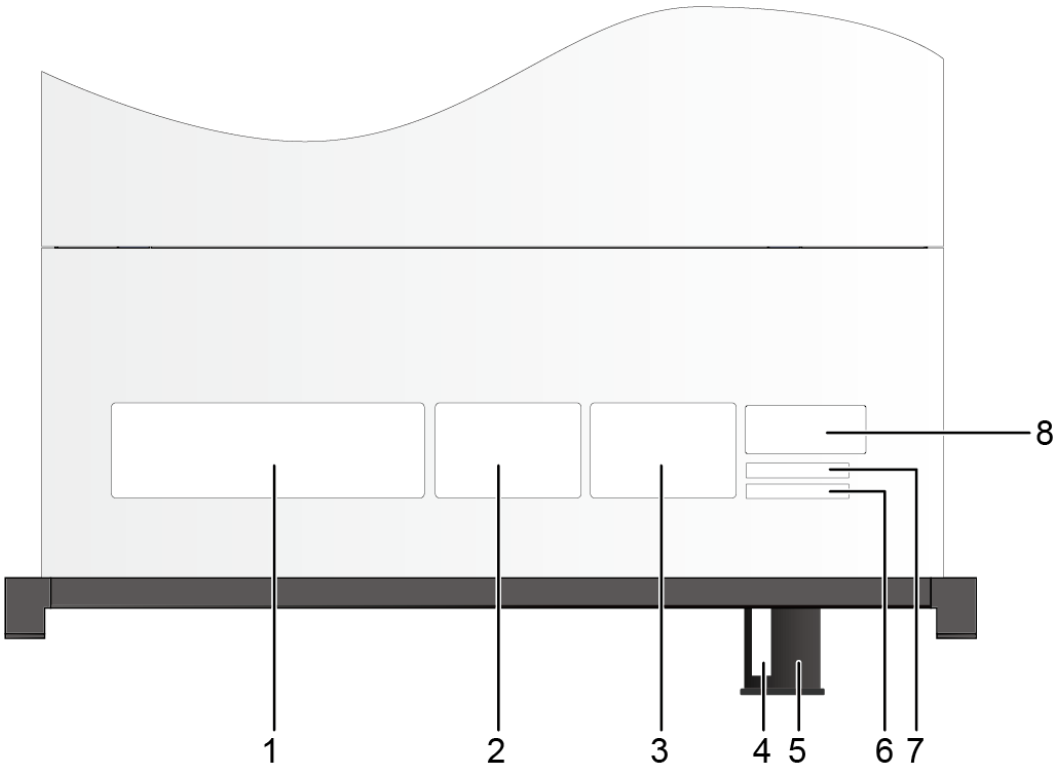

1	Nameplate	2	Certificate

3	Quick access label	4	SN **NOTE** For details, see **A.2 SN**.
5	Slide-out label plate **NOTE** The location of the slide-out label plate varies depending on the server model or configuration. For details, see **5.1.1 Appearance**.	6	SN **NOTE** For details, see **A.2 SN**.
7	Reserved space for customized label	8	Pressure-proof label **NOTE** This label warns users not place any objects on top of a rack-mounted device.

A.1.1.1 Nameplate

Figure A-2 Sample nameplate

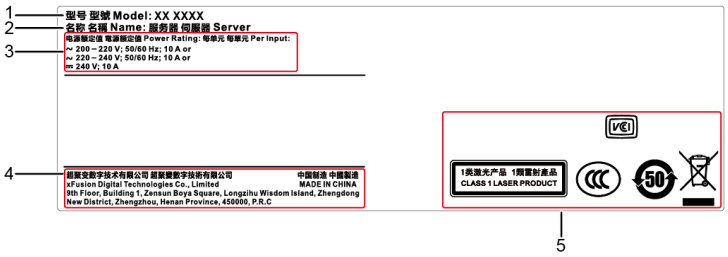

Table A-1 Nameplate description

No.	Description
1	Server model For details, see **A.4 Nameplate**.
2	Device name
3	Power supply requirements
4	Vendor information
5	Certification marks

A.1.1.2 Certificate

Figure A-3 Certificate example

Table A-2 Certificate description

No.	Description
1	Order
2	No. **NOTE** For details, see **Figure A-4** and **Table A-3**.
3	QC inspector
4	Production date
5	No. barcode

Figure A-4 Certificate number example

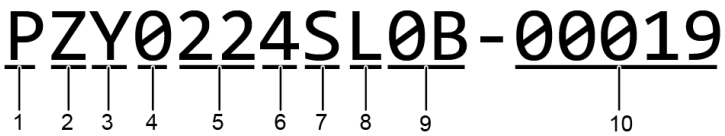

Table A-3 Certificate number description

No.	Description
1	**P**: a fixed value for this digit
2	**Z**: a fixed value for this digit
3	• **Y**: a server • **B**: a semi-finished server • **N**: a spare part

 Copyright © xFusion Digital Technologies Co., Ltd.

No.	Description
4	**0**: a value for the reserved digit
5	Year (two characters)
6	Month (one character) ● Digits 1 to 9 indicate January to September respectively. ● Letters A to C indicate October to December respectively.
7	Day (one character) ● Digits 1 to 9 indicate the 1st to 9th. ● Letters A to H indicate the 10th to 17th. ● Letters J to N indicate the 18th to 22nd. ● Letters P to Y indicate the 23rd to 31st.
8	Hour (one character) ● Digits 0 to 9 indicate 0:00 to 9:00. ● Letters A to H indicate 10:00 to 17:00. ● Letters J to N indicate 18:00 to 22:00. ● Letters P to Q indicate 23:00 to 24:00.
9	Serial number (two characters).
10	Manufacturing serial number (five characters).

A.1.1.3 Quick Access Label

Figure A-5 Quick access label example

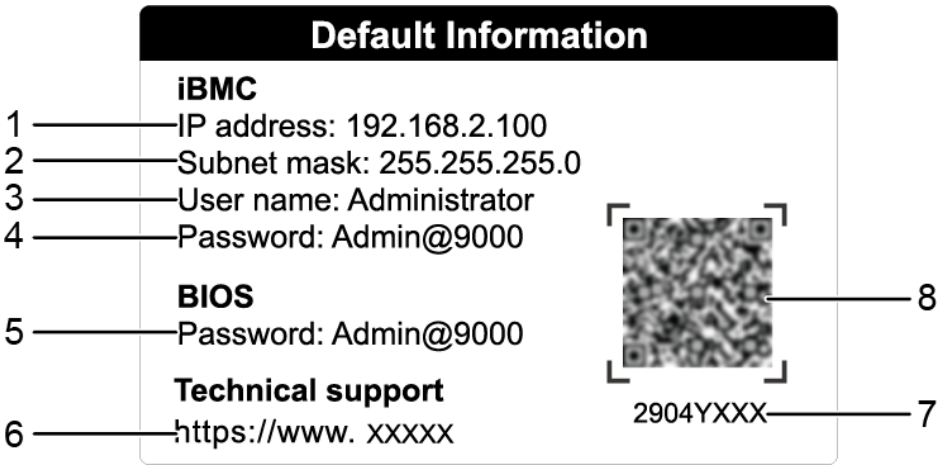

Table A-4 Quick access label description

No.	Description
1	Default IP address of the iBMC management network port
2	Default subnet mask of the iBMC management network port
3	Default iBMC username
4	Default iBMC password
5	Default BIOS password
6	Technical support website
7	P/N code
8	QR code **NOTE** Scan the QR code to obtain technical support resources.

A.1.2 Chassis Internal Label

Figure A-6 Chassis internal label

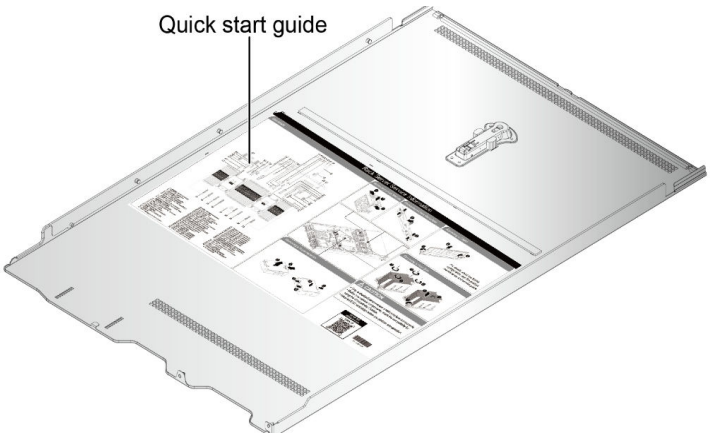

NOTE

- The quick start guide is located on the inside of the chassis cover. It describes how to remove the mainboard components, important components of the chassis, precautions, and QR codes of technical resources. The pictures are for reference only. For details, see the actual product.
- The quick start guide is optional. For details, see the actual product.

 Copyright © xFusion Digital Technologies Co., Ltd.

A.1.3 Chassis Tail Label

Figure A-7 Chassis tail label

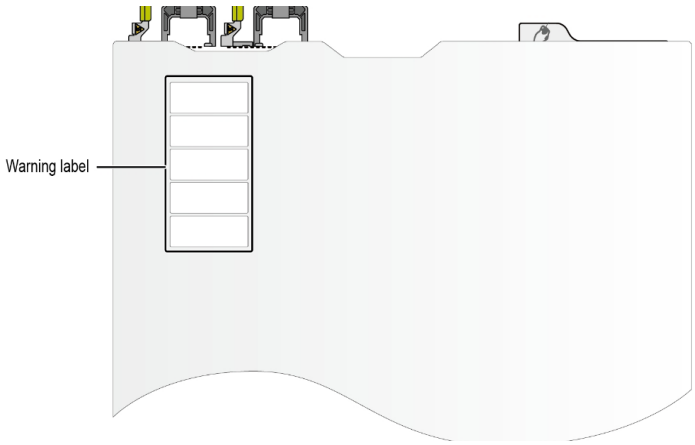

NOTE

For details about the warning label, see the ***Server Safety Information***.

A.2 SN

The serial number (SN) on the slide-out label plate uniquely identifies a device. The SN is required when you contact technical support. **SN example 1** and **SN example 2** show two SN examples.

- SN example 1

Figure A-8 SN example 1

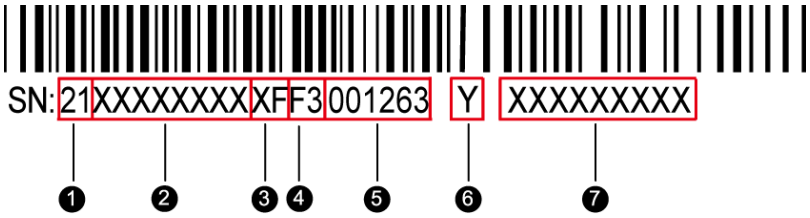

- SN example 2

Figure A-9 SN example 2

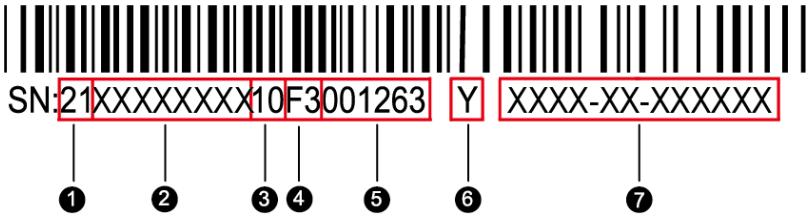

Table A-5 SN description

No.	Description
1	SN ID (two characters), which is 21.
2	Material identification code (eight digits), that is, processing code.
3	Vendor code (two digits), that is, the code of the processing place.
4	Year and month (two characters). ● The first character indicates the year. – Digits 1 to 9 indicate years 2001 to 2009, respectively. – Letters A to H indicate years 2010 to 2017, respectively. – Letters J to N indicate years 2018 to 2022, respectively. – Letters P to Y indicate years 2023 to 2032, respectively. **NOTE** The years from 2010 are represented by upper-case letters excluding I, O, and Z because the three letters are similar to the digits 1, 0, and 2. ● The second character indicates the month. – Digits 1 to 9 indicate January to September, respectively. – Letters A to C indicate October to December, respectively.
5	Sequence number (six characters).
6	RoHS compliance (one character). Y indicates environmental-friendly processing.
7	Internal model, that is, product name. The actual board model format may vary. For details, see the actual board model.

 Copyright © xFusion Digital Technologies Co., Ltd.

A.3 Operating Temperature Limitations

Table A-6 Operating temperature limitations

Configuration	Maximum Operating Temperature: 30ºC (86ºF)	Maximum Operating Temperature: 35ºC (95ºF)
24 x 3.5" drive switch model configuration	When the number of front drives is less than or equal to 12, A40 GPUs are supported.	● When the CPU power is higher than 270 W and the number of front drives is less than or equal to 12, A100/H100 GPUs are supported. ● When the CPU power is 270 W or lower than 270 W and the number of front drives is less than or equal to 16, A100/H100 GPUs are supported. ● A40 GPUs are not supported.
20 x 2.5" drive switch model configuration	All configurations are supported.	● A40 GPUs are not supported.
24 x 3.5" drive pass-through model configuration	When the number of front drives is less than or equal to 12, A40 GPUs are supported.	● When the CPU power is higher than 270 W and the number of front drives is less than or equal to 12, A100/H100 GPUs are supported. ● When the CPU power is 270 W or lower than 270 W and the number of front drives is less than or equal to 16, A100/H100 GPUs are supported. ● A40 GPUs are not supported.

 Copyright © xFusion Digital Technologies Co., Ltd.

NOTE

- When a single fan is faulty, the highest operating temperature is 5ºC (9ºF) lower than the rated value.
- When a single fan is faulty, the system performance may be affected.
- It is recommended that servers be deployed at an interval of 1U to reduce server noise and improve server energy efficiency.

A.4 Nameplate

Certified Model	Remarks
G5500 V7	Global
H52GP-07	Global
Note: The nameplate depends on the actual product.	

A.5 RAS Features

The server supports a variety of Reliability, Availability, and Serviceability (RAS) features. You can configure these features for better performance.

For details about RAS features, see the *FusionServer Sapphire Rapids Platform Server RAS Feature Technical White Paper*.

A.6 Sensor List

Sensor	Description	Component
Inlet Temp	Air inlet temperature	Right mounting ear plate
Outlet Temp	Air outlet temperature	BMC card
PCH Temp	PCH bridge temperature	Mainboard
PCH Status	PCH chip fault diagnosis health status	Mainboard
1711 Core Temp	Core temperature of the 1711 chip	BMC card
SSD Max Temp	Maximum SSD temperature (reported by BMA)	SSD
CPU*N* Core Temp	CPU core temperature	CPU*N* *N* indicates the CPU number. The value is **1** or **2**.

 Copyright © xFusion Digital Technologies Co., Ltd.

Sensor	Description	Component
CPU*N* DTS	Difference between the real-time CPU temperature and the CPU core temperature threshold	CPU*N* *N* indicates the CPU number. The value is **1** or **2**.
CPU*N* Margin	Difference between the real-time CPU temperature and the CPU Tcontrol threshold	CPU*N* *N* indicates the CPU number. The value is **1** or **2**.
CPU*N* MEM Temp	Temperature of the memory module corresponding to a CPU	Memory module corresponding to CPU *N* *N* indicates the CPU number. The value is **1** or **2**.
CPU*N* 12V	12 V voltage supplied by the mainboard to the CPU	Mainboard *N* indicates the CPU number. The value is **1** or **2**.
CPU*N* Status	CPU status check	CPU*N* *N* indicates the CPU number. The value is **1** or **2**.
CPU*N* Memory	Check of the status of the memory module corresponding to a CPU	Memory module corresponding to CPU *N* *N* indicates the CPU number. The value is **1** or **2**.
CPU*N* UPI Link	CPU UPI link fault diagnosis health status	Mainboard or CPU N *N* indicates the CPU number. The value is **1** or **2**.
CPU*N* Prochot	CPU Prochot	CPU*N* *N* indicates the CPU number. The value is **1** or **2**.
CPU*N* VCCIN	CPU VCCIN voltage	Mainboard *N* indicates the CPU number. The value is **1** or **2**.

 Copyright © xFusion Digital Technologies Co., Ltd.

Sensor	Description	Component
CPU*N* FIVRA	CPU FIVRA voltage	Mainboard or CPU *N* *N* indicates the CPU number. The value is **1** or **2**.
CPU*N* INFAON	CPU INFAON voltage	CPU*N* *N* indicates the CPU number. The value is **1** or **2**.
CPU*N* VCCFA	CPU VCCFA voltage	CPU*N* *N* indicates the CPU number. The value is **1** or **2**.
CPU*N* VCCD	CPU VCCD voltage	CPU*N* *N* indicates the CPU number. The value is **1** or **2**.
CPU*N* VRD Temp	CPU VRD temperature	Mainboard *N* indicates the CPU number. The value is **1** or **2**.
CPU*N* FIVRA Temp	CPU FIVRA temperature	CPU*N* *N* indicates the CPU number. The value is **1** or **2**.
CPU*N* INFAON Temp	CPU INFAON temperature	CPU*N* *N* indicates the CPU number. The value is **1** or **2**.
CPU*N* VCCFA Temp	CPU VCCFA temperature	CPU*N* *N* indicates the CPU number. The value is **1** or **2**.
CPU*N* VCCD Temp	CPU VCCD temperature	CPU*N* *N* indicates the CPU number. The value is **1** or **2**.
PS*N* VIN	PSU *N* input voltage	PSU *N* *N* indicates the PSU number. The value ranges from **1** to **4**.

 Copyright © xFusion Digital Technologies Co., Ltd.

Sensor	Description	Component
PS$ IIn	PSU input current	PSU
PS$ IOut	PSU output current	PSU
PS$ POut	PSU output power	PSU
PS$ Temp	Maximum internal temperature of the PSU	PSU
PS$ Inlet Temp	PSU air inlet temperature	PSU
PS*N* Status	PSU fault status	PSU *N* *N* indicates the PSU number. The value ranges from **1** to **4**.
PS*N* Fan Status	PSU fan fault status	PSU *N* *N* indicates the PSU number. The value ranges from **1** to **4**.
PS*N* Temp Status	PSU presence status	PSU *N* *N* indicates the PSU number. The value ranges from **1** to **4**.
PS Redundancy	Redundancy failure due to PSU removal	PSU
Power	Server input power	PSU
Disks Temp	Maximum drive temperature	Drives
Power*N*	PSU input power	PSU *N* *N* indicates the PSU number. The value ranges from **1** to **4**.
FAN*N* F Speed	Fan speed	Fan module *N* *N* indicates the fan module number. The value ranges from **1** to **8**.
FAN*N* R Speed		
FAN*N* F Status	Fan fault status	Fan module *N* N indicates the fan module ID. The value is **1A**, **1B**, **2A**, **2B**, **3A**, **3B**, **4A**, or **4B**.
FAN*N* R Status		
FAN*N* F Presence	Fan module presence	Fan module *N* N indicates the fan module ID. The value is

 Copyright © xFusion Digital Technologies Co., Ltd.

Sensor	Description	Component
FAN*N* R Presence		**1A**, **1B**, **2A**, **2B**, **3A**, **3B**, **4A**, or **4B**.
DIMM*N*	DIMM status	DIMM *N* *N* indicates the DIMM slot number.
RTC Battery	RTC battery status. An alarm is generated when the voltage is lower than 1 V.	RTC battery on the mainboard
Power Button	Power button pressed status	Mainboard and power button
Watchdog2	Watchdog	Mainboard
Mngmnt Health	Management subsystem health status	Management module
UID Button	UID button status	Mainboard
PwrOk Sig. Drop	Voltage drop status	Mainboard
PwrOn TimeOut	Power-on timeout	Mainboard
PwrCap Status	Power capping status	Mainboard
HDD Backplane	Entity presence	Drive backplane
HDD BP Status	Drive backplane health status	Drive backplane
HDD BP$ Temp	HDD backplane temperature	Drive backplane
Riser*N* Card	Entity presence	Riser card *N* *N* indicates the riser card slot number. The value is **1** or **2**.
Riser*N* 12V	12 V voltage supplied by the mainboard to the riser card	Mainboard *N* indicates the riser card slot number. The value is **1** or **2**.
Riser$ Temp	Riser card temperature	Riser card
SAS Cable	Entity presence	SAS cable on the mainboard
LCD Status	LCD health status	LCD
LCD Presence	LCD presence	LCD

 Copyright © xFusion Digital Technologies Co., Ltd.

Sensor	Description	Component
DISK$	Drive status	Drive
RAID Presence	RAID controller card presence	RAID controller card
RAID Temp	Temperature of the RAID controller card	RAID controller card
Raid BBU Temp	BBU temperature of the RAID controller card	Supercapacitor of the RAID controller card
PCIE Status	PCIe status error	PCIe card
PCIe$ OP Temp	PCIe card optical module temperature sensor	PCIe card
PCIe$ Temp	PCIe card chip temperature sensor	PCIe card
PCIe RAID$ Temp	PCIe RAID controller card temperature	PCIe RAID controller card
PCIe$ Card BBU	BBU status of the PCIe RAID controller card	PCIe RAID controller card
PCIe NIC$ Temp	PCIe card chip temperature sensor	PCIe card
PCIe FC$ Temp	PCIe card chip temperature sensor	PCIe card
IB$ Temp	IB NIC temperature sensor	IB card
M2 Adapter Temp	M.2 adapter temperature	M.2 adapter card
M2Disk1	Status of the M.2 drive on the riser card	M.2 adapter card
M2Disk2	Status of the M.2 drive on the riser card	M.2 adapter card
AreaIntrusion	Listening to the unpacking action	Mainboard
OCP$ OP Temp	OCP card optical module temperature sensor	OCP 3.0 NIC
OCP$ Temp	OCP card chip temperature sensor	OCP 3.0 NIC
SSD Disk$ Temp	SSD temperature	SSD
GPU$ Power	GPU power	GPU
GPU$ Temp	GPU temperature	GPU

 Copyright © xFusion Digital Technologies Co., Ltd.

Sensor	Description	Component
System Notice	Hot restart reminder and fault diagnosis program information collection	N/A
System Error	System suspension or restart. Check the background logs.	
ACPI State	ACPI status	
SysFWProgress	Software processes and system startup errors	
SysRestart	System restart causes	
Boot Error	Boot error	
CPU Usage	CPU usage	
Memory Usage	Memory usage	
BMC Boot Up	BMC startup event	
BMC Time Hopping	Time hopping	
NTP Sync Failed	NTP synchronization failure and recovery events	
SEL Status	SEL full or events being cleared	
Op. Log Full	Operation log full or events being cleared	
Sec. Log Full	Security log full or events being cleared	
Host Loss	System monitoring software (BMA) link loss detection	
ProductID Status	Product identification status	

A.7 FAQs About Optical Modules

The server NIC must be used with optical modules that have passed the compatibility test of xFusion. With uncertain transmission reliability, optical modules that have not been tested for compatibility may affect the service stability. xFusion is not liable for any problems caused by the use of optical modules that have not been tested for compatibility by xFusion and will not fix such problems in principle.

 Copyright © xFusion Digital Technologies Co., Ltd.

When performing the compatibility tests on the optical modules used by servers, xFusion comprehensively verifies their functions to ensure their quality. The verified items include optical module plugging or unplugging, transmit and receive optical power, signal transmission quality, basic data reading, error tolerance, compatibility, electromagnetic compatibility (EMC), and environmental performance.

Table A-7 Problems of using optical modules that have not been tested for compatibility and corresponding causes

Symptom	Cause
Due to non-standard structure and size, an optical module fails to be inserted into the optical interface or removed after being inserted.	Structures or sizes of some optical modules that have not been tested for compatibility do not comply with the Multi-Source Agreement (MSA). When such an optical module is installed on an optical interface, the size of this optical module hinders optical module installation on adjacent optical interfaces. In addition, optical modules can be unlocked through self-unlocking, press-unlocking, push-unlocking, or tilt-unlocking. For optical modules that have not been tested for compatibility, the server may not be able to have the optical modules removed that are not unlocked through press-unlocking.
Data bus defects cause the data bus suspension of a device.	Some optical modules that have not been tested for compatibility have defects in data bus designs. Using such an optical module causes suspension of the connected data bus on the device. As a result, data on the suspended bus cannot be read.
An optical module with improper edge connector size damages electronic components of the optical interface.	If an optical module that has not been tested for compatibility with improper edge connector size is used on an optical interface, electronic components of the optical interface will be damaged by short circuits.
Unnormalized temperature monitoring causes incorrect alarms.	The temperature monitoring systems of some optical modules that have not been tested for compatibility do not comply with industry standards and report temperature values higher than the real temperature. When such optical modules are used, the system will report incorrect temperature alarms.
Improper register settings cause errors or failures in reading parameters or diagnostic information.	Some optical modules that have not been tested for compatibility have improper register values on page A0, which can cause errors or failures when the data bus attempts to read parameters or diagnostic information.
Optical modules bring electromagnetic interference to nearby devices.	Some optical modules that have not been tested for compatibility are not designed in compliance with EMC standards and have low anti-interference capability. Additionally, they bring electromagnetic interference to nearby devices.

 Copyright © xFusion Digital Technologies Co., Ltd.

Symptom	Cause
Services are interrupted when an optical module is operating under overtemperature.	The operating temperature ranges of optical modules that have not been tested for compatibility cannot meet service requirements. When they are used under a relatively high temperature, the optical power decreases, resulting in service interruption.
Optical modules cannot work properly when the temperature change rate exceeds the normal range without adapting to the heat dissipation policy of the server.	Some optical modules that are not tested for compatibility have poor heat dissipation. Since they are not adapted to the heat dissipation policy of the server, abnormally high temperatures may occur continuously after they are running for a period of time. As a result, the optical modules cannot work properly.

 Copyright © xFusion Digital Technologies Co., Ltd.

B Glossary

B.1 A-E

B

baseboard management controller (BMC)	The BMC complies with the Intelligent Platform Management Interface (IPMI). It collects, processes, and stores sensor signals, and monitors the operating status of components. The BMC provides the hardware status and alarm information about the managed objects to the management system so that the management system can implement unified management of the devices.

E

ejector lever	A part on the panel of a device used to facilitate installation or removal of the device.
Ethernet	A baseband local area network (LAN) architecture developed by Xerox Corporation by partnering with Intel and DEC. Ethernet uses the Carrier Sense Multiple Access/Collision Detection (CSMA/CD) access method and allows data transfer over various cables at 10 Mbit/s. The Ethernet specification is the basis for the IEEE 802.3 standard.

 Copyright © xFusion Digital Technologies Co., Ltd.

B.2 F-J

G

Gigabit Ethernet (GE)	An extension and enhancement of traditional shared media Ethernet standards. It is compatible with 10 Mbit/s and 100 Mbit/s Ethernet and complies with IEEE 802.3z standards.

H

Hot swap	Replacing or adding components without stopping or shutting down the system.

B.3 K-O

K

KVM	A hardware device that provides public video, keyboard and mouse (KVM).

B.4 P-T

P

panel	An external component (including but not limited to ejector levers, indicators, and ports) on the front or rear of the server. It seals the front and rear of the chassis to ensure optimal ventilation and electromagnetic compatibility (EMC).

 Copyright © xFusion Digital Technologies Co., Ltd.

Peripheral Component Interconnect Express (PCIe)	A computer bus PCI, which uses the existing PCI programming concepts and communication standards, but builds a faster serial communication system. Intel® is the main sponsor for PCIe. PCIe is used only for internal interconnection. PCIe is based on the existing PCI system. Therefore, the existing PCI system can be converted into PCIe only by modifying the physical layer without modifying the software. PCIe has a faster rate. It can replace almost all existing internal buses (including AGP and PCI).

R

redundancy	A mechanism that allows a backup device to automatically take over services from a faulty device to ensure uninterrupted running of the system.
redundant array of independent disks (RAID)	A storage technology that combines multiple physical drives into a logical unit for the purposes of data redundancy and performance improvement.

S

server	A special computer that provides services for clients over a network.
System event log (SEL)	Event records stored in the system used for subsequent fault diagnosis and system recovery.

 Copyright © xFusion Digital Technologies Co., Ltd.

B.5 U-Z

U

U	A unit defined in International Electrotechnical Commission (IEC) 60297-1 to measure the height of a cabinet, chassis, or subrack. 1 U = 44.45 mm = 1.75 in.
UltraPath Interconnect (UPI)	A point-to-point processor interconnect developed by Intel®.

 Copyright © xFusion Digital Technologies Co., Ltd.

C Acronyms and Abbreviations

C.1 A-E

A

AC	alternating current
AES	Advanced Encryption Standard New Instruction Set
ARP	Address Resolution Protocol
AVX	Advanced Vector Extensions

B

BBU	backup battery unit
BIOS	Basic Input/Output System
BMC	Baseboard Management Controller

C

CCC	China Compulsory Certification
CD	calendar day
CE	Conformite Europeenne
CIM	Common Information Model
CLI	command-line interface

 Copyright © xFusion Digital Technologies Co., Ltd.

D

DC	direct current
DDR4	Double Data Rate 4
DDDC	double device data correction
DEMT	Dynamic Energy Management Technology
DIMM	dual in-line memory module
DRAM	dynamic random-access memory
DVD	digital video disc

E

ECC	error checking and correcting
ECMA	European Computer Manufacturer Association
EDB	Execute Disable Bit
EID	Enclosure ID (backplane ID)
EN	European Efficiency
ERP	enterprise resource planning
ETS	European Telecommunication Standards

C.2 F-J

F

FB-DIMM	Fully Buffered DIMM
FC	Fiber Channel
FCC	Federal Communications Commission
FCoE	Fibre Channel Over Ethernet
FTP	File Transfer Protocol

 Copyright © xFusion Digital Technologies Co., Ltd.

G

GE	Gigabit Ethernet
GPIO	General Purpose Input/Output
GPU	graphics processing unit

H

HA	high availability
HDD	hard disk drive
HPC	high-performance computing
HTTP	Hypertext Transfer Protocol
HTTPS	Hypertext Transfer Protocol Secure

I

iBMC	Intelligent Baseboard Management Controller
IC	Industry Canada
ICMP	Internet Control Message Protocol
IDC	Internet Data Center
IEC	International Electrotechnical Commission
IEEE	Institute of Electrical and Electronics Engineers
IGMP	Internet Group Message Protocol
IOPS	input/output operations per second
IP	Internet Protocol
IPC	intelligent power capability
IPMB	Intelligent Platform Management Bus
IPMI	Intelligent Platform Management Interface

 Copyright © xFusion Digital Technologies Co., Ltd.

C.3 K-O

K

KVM	keyboard, video, and mouse

L

LC	Lucent connector
LRDIMM	load-reduced dual in-line memory module
LED	light emitting diode
LOM	LAN on motherboard

M

MAC	media access control
MMC	module management controller

N

NBD	next business day
NC-SI	Network Controller Sideband Interface

O

OCP	Open Compute Project

C.4 P-T

P

PCIe	Peripheral Component Interconnect Express

 Copyright © xFusion Digital Technologies Co., Ltd.

PDU	power distribution unit
PHY	physical layer
PMBUS	power management bus
POK	power OK
PWM	pulse-width modulation
PXE	Preboot Execution Environment

R

RAID	redundant array of independent disks
RAS	reliability, availability and serviceability
RDIMM	registered dual in-line memory module
REACH	Registration Evaluation and Authorization of Chemicals
RJ45	registered jack 45
RoHS	Restriction of the Use of Certain Hazardous Substances in Electrical and Electronic Equipment

S

SAS	Serial Attached Small Computer System Interface
SATA	Serial Advanced Technology Attachment
SCM	supply chain management
SDDC	single device data correction
SERDES	serializer/deserializer
SGMII	serial gigabit media independent interface
SMI	serial management interface
SMTP	Simple Mail Transfer Protocol
SNMP	Simple Network Management Protocol
SOL	serial over LAN

 Copyright © xFusion Digital Technologies Co., Ltd.

SONCAP	Standards Organization of Nigeria-Conformity Assessment Program
SSD	solid-state drive
SSE	Streaming SIMD Extensions

T

TACH	tachometer signal
TBT	Turbo Boost Technology
TCG	Trusted Computing Group
TCM	trusted cryptography module
TCO	total cost of ownership
TDP	thermal design power
TELNET	Telecommunication Network Protocol
TET	Trusted Execution Technology
TFM	TransFlash module
TFTP	Trivial File Transfer Protocol
TOE	TCP offload engine
TPM	trusted platform module

C.5 U-Z

U

UBC	Union Bus Connector
UBC DD	Union Bus Connector Double Density
UDIMM	unbuffered dual in-line memory module
UEFI	Unified Extensible Firmware Interface
UID	unit identification light
UL	Underwriter Laboratories Inc.
UPI	UltraPath Interconnect
USB	Universal Serial Bus

 Copyright © xFusion Digital Technologies Co., Ltd.

V

VCCI	Voluntary Control Council for Interference by Information Technology Equipment
VGA	Video Graphics Array
VLAN	Virtual local area network
VRD	Voltage regulator-down
VROC	Virtual RAID on CPU

W

WEEE	Waste Electrical and Electronic Equipment
WSMAN	Web Service Management

 Copyright © xFusion Digital Technologies Co., Ltd.