FusionServer XH321 V6 Server Node

Technical White Paper

Issue	06
Date	2023-11-30

xFusion Digital Technologies Co., Ltd.

Copyright © xFusion Digital Technologies Co., Ltd. 2023. All rights reserved.

No part of this document may be reproduced or transmitted in any form or by any means without prior written consent of xFusion Digital Technologies Co., Ltd.

Trademarks and Permissions

xFUSION and other xFusion trademarks are trademarks of xFusion Digital Technologies Co., Ltd. All other trademarks and trade names mentioned in this document are the property of their respective holders.

Notice

In this document, "xFusion" is used to refer to "xFusion Digital Technologies Co., Ltd." for concise description and easy understanding, which does not mean that "xFusion" may have any other meaning. Any "xFusion" mentioned or described hereof may not be understood as any meaning other than "xFusion Digital Technologies Co., Ltd.", and xFusion Digital Technologies Co., Ltd. shall not bear any liability resulting from the use of "xFusion".

The purchased products, services and features are stipulated by the contract made between xFusion and the customer. All or part of the products, services and features described in this document may not be within the purchase scope or the usage scope. Unless otherwise specified in the contract, all statements, information, and recommendations in this document are provided "AS IS" without warranties, guarantees or representations of any kind, either express or implied.

The information in this document is subject to change without notice. Every effort has been made in the preparation of this document to ensure accuracy of the contents, but all statements, information, and recommendations in this document do not constitute a warranty of any kind, express or implied.

xFusion Digital Technologies Co., Ltd.

Address: 9th Floor, Building 1, Zensun Boya Square, Longzihu Wisdom Island
Zhengdong New District 450046
Zhengzhou, Henan Province
People's Republic of China

Website: https://www.xfusion.com

About This Document

Purpose

This document describes the FusionServer XH321 V6 server node in terms of features, structure, specifications, and component hardware and software compatibility.

Intended Audience

This document is intended for pre-sales engineers.

Symbol Conventions

The symbols that may be found in this document are defined as follows.

Symbol	Description
DANGER	Indicates a hazard with a high level of risk which, if not avoided, will result in death or serious injury.
WARNING	Indicates a hazard with a medium level of risk which, if not avoided, could result in death or serious injury.
CAUTION	Indicates a hazard with a low level of risk which, if not avoided, could result in minor or moderate injury.
NOTICE	Indicates a potentially hazardous situation which, if not avoided, could result in equipment damage, data loss, performance deterioration, or unanticipated results. NOTICE is used to address practices not related to personal injury.
NOTE	Supplements the important information in the main text. NOTE is used to address information not related to personal injury, equipment damage, and environment deterioration.

 Copyright © xFusion Digital Technologies Co., Ltd.

Change History

Issue	Date	Description
06	2023-11-30	● Updated **10 Certifications** . ● Added **11 Waste Product Recycling**.
05	2023-02-10	Updated **6.1 Technical Specifications**.
04	2022-11-04	Updated: ● **2 Features** . ● **8.1 Security**.
03	2022-09-10	Updated: ● **6.2 Environmental Specifications**. ● **A.3 Operating Temperature Limitations**.
02	2022-03-18	Updated **6.1 Technical Specifications** and **A.5 Sensor List**.
01	2021-12-28	This issue is the first official release.

 Copyright © xFusion Digital Technologies Co., Ltd.

Contents

About This Document ii

1 Overview 1

2 Features 2

3 Physical Structure 5

4 Logical Structure 7

5 Hardware Description 9

5.1 Front Panel 9
5.1.1 Appearance 9
5.1.2 Indicators and Buttons 10
5.1.3 Ports 13
5.1.4 Installation Positions 15
5.2 Processors 15
5.3 Memory 16
5.3.1 DDR4 Memory 16
5.3.1.1 Memory Identifier 16
5.3.1.2 Memory Subsystem Architecture 17
5.3.1.3 Memory Compatibility 18
5.3.1.4 DIMM Installation Rules 19
5.3.1.5 Memory Installation Positions 20
5.3.1.6 Memory Protection Technologies 22
5.4 Storage 22
5.4.1 Drive Configurations 22
5.4.2 Drive Numbering 23
5.4.3 RAID Controller Card 23
5.5 Network 23
5.5.1 OCP 3.0 Network Adapter 23
5.6 I/O Expansion 24
5.6.1 PCIe Cards 24
5.6.2 PCIe Slots 24
5.6.3 PCIe Slot Description 25
5.7 PSUs 26

 Copyright © xFusion Digital Technologies Co., Ltd.

5.8 Boards....27
5.8.1 Mainboard....27
6 Product Specifications....29
6.1 Technical Specifications....29
6.2 Environmental Specifications....32
6.3 Physical Specifications....34
7 Software and Hardware Compatibility....35
8 Safety Instructions....36
8.1 Security....36
8.2 Maintenance and Warranty....39
9 System Management....40
10 Certifications....42
11 Waste Product Recycling....44
A Appendix....45
A.1 Node Label Information....45
A.1.1 Node Label....45
A.2 Product SN....46
A.3 Operating Temperature Limitations....47
A.4 RAS Features....50
A.5 Sensor List....51
B Glossary....57
B.1 A-E....57
B.2 F-J....58
B.3 K-O....58
B.4 P-T....58
B.5 U-Z....59
C Acronyms and Abbreviations....60
C.1 A-E....60
C.2 F-J....61
C.3 K-O....62
C.4 P-T....63
C.5 U-Z....65

 Copyright © xFusion Digital Technologies Co., Ltd.

1 Overview

FusionServer XH321 V6 is a server node designed for X6000 V6 servers. An X6000 V6 server can house up to four XH321 V6 server nodes in a 2 U chassis.

The XH321 V6 delivers supreme performance and high storage density in limited space through innovative design. It is easy to manage and maintain.

XH321 V6 supports two M.2 SSDs, a maximum of 16 DDR4 DIMMs, two PCIe cards, one RAID controller card, and one OCP card.

XH321 V6 is ideal for data center, cloud computing, Big Data, and Internet applications.

Figure 1-1 XH321 V6

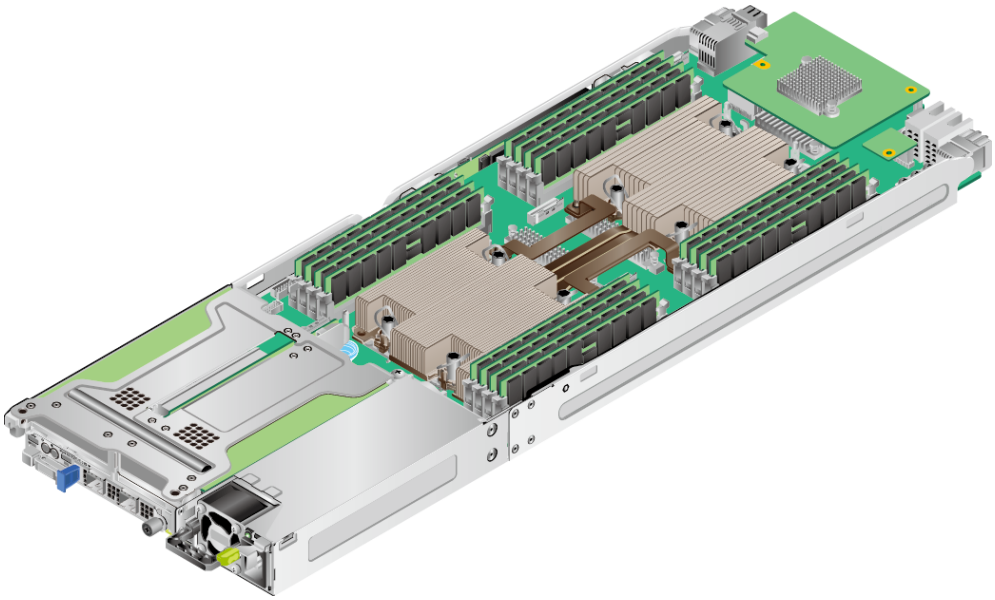

 Copyright © xFusion Digital Technologies Co., Ltd.

2 Features

Performance and Scalability

- Powered by the third-generation Intel® Xeon® Scalable Ice Lake processors, the server provides up to 40 cores, 3.6 GHz frequency, a 60 MB L3 cache, and up to three 11.2 GT/s UPI links between the processors, which deliver supreme processing performance.
  - It supports up to two processors with 80 cores and 160 threads to maximize the concurrent execution of multithreaded applications.
  - The L2 cache capacity is increased. Each core exclusively occupies 1.25 MB L2 cache, and at least 1.5 MB L3 cache.
  - Intel Turbo Boost Technology 2.0 allows processor cores to run faster than the frequency specified in the Thermal Design Power (TDP) configuration if they are operating below power, current, and temperature specification limits.
  - Intel Hyper-Threading Technology enables each processor core to run up to two threads, improving parallel computation capability.
  - The hardware-assisted Intel® Virtualization Technology (Intel® VT) allows operating system (OS) to better use hardware to address virtualization workloads.
  - Intel® Advanced Vector Extensions 512 (Intel AVX-512) significantly accelerates floating-point performance for computing-intensive applications.
  - Intel DL Boost (VNNI) is supported to improve the performance of deep learning applications.
- The server supports a maximum of 16 DDR4 ECC 3200 MT/s DIMMs. The DDR4 ECC DIMMs support registered DIMMs (RDIMM) and load-reduced DIMMs (LRDIMMs), which provide high speed and availability. A server supports a maximum memory capacity of 2048 GB and a maximum memory bandwidth of 400 GB/s in theory.
- The server supports a maximum of 8 Intel® Optane™ Persistent Memory Module 200 series (PMem modules for short), which must be used with the DDR4 memory modules. When the DDR4 memory modules are used together, the server supports a maximum of 6 TB memory capacity (calculated based on a maximum of 256 GB capacity per DDR4 memory module and a maximum of 512 GB capacity per PMem module).

 Copyright © xFusion Digital Technologies Co., Ltd.

- It supports 2 M.2 SSDs. The SSDs deliver higher I/O performance than HDDs. An SSD supports approximately 100 times more I/O operations per second (IOPS) than a typical HDD.
- With Intel integrated I/O, the third-generation Intel® Xeon® Scalable processors integrate the PCIe 4.0 controller to shorten I/O latency and improve overall system performance.
- The server supports two HHHL PCIe 4.0 cards. Each processor supports one PCIe 4.0 x8 card with the Socket Direct function.
- One slot dedicated for the OCP 3.0 network adapter.

Availability and Serviceability

- Carrier-class components with process expertise ensure high system reliability and availability.
- The server supports hot-swappable SAS/SATA/NVMe U.2 drives. SAS/SATA drives support RAID 0, 1, 5, 6, 10, 50, and 60, depending on the RAID controller card used. It also uses a supercapacitor to protect the RAID cache data against power failures.
- The server provides simplified O&M and efficient troubleshooting through the UID/HLY indicators on the front panel and iBMC WebUI.
- The panel provides iBMC direct connect management ports to support local iBMC O&M, improving O&M efficiency.
- Each node provides one hot-swappable PSU. The entire chassis supports a maximum of four hot-swappable PSUs in 1+1 or 2+2 redundancy.
- The built-in iBMC monitors system parameters in real time, triggers alarms, and performs recovery actions to minimize the system downtime.
- For details about the warranty policy, visit **Warranty**.

Manageability and Security

- The built-in iBMC monitors server operating status and provides remote management.
- A password is required for accessing the BIOS, ensuring system boot and management security.
- The NC-SI feature allows a network port to serve as a management port and a service port. The NC-SI feature is disabled by default and can be enabled through the iBMC or BIOS.
- The integrated Unified Extensible Firmware Interface (UEFI) improves setup, configuration, and update efficiency and simplifies fault handling.
- Aggregated management of node management ports
- Intel Execute Disable Bit (EDB) function prevents certain types of malicious buffer overflow attacks when working with a supported OS.
- The Intel Converged Boot Guard & Trusted Execution Technology (Intel CBnT) prevents malicious software attacks based on hardware, prevents the firmware from being maliciously modified, and prevents the execution of unauthorized boot blocks. It also allows applications to run in their own independent space without being affected by other software running in the system, thereby enhancing security.

 Copyright © xFusion Digital Technologies Co., Ltd.

- The trusted platform module (TPM) and trusted cryptography module (TCM) provide advanced encryption functions, such as digital signatures and remote authentication.
- The secure boot based on the chip RoT implements level-by-level firmware verification starting from the hardware RoT and builds a complete secure boot chain.
- The following requirements in NIST SP 800-147B are met:
  - The BIOS firmware digital signature update mechanism is supported. During the upgrade, the digital signature is verified to prevent unauthorized BIOS firmware upgrade.
  - The flash security protection mechanism is supported to prevent unauthorized modification of the flash memory in the OS.

NOTE

The service port with NC-SI enabled supports the following configuration:

- Configuring any port on the OCP 3.0 network adapter or other network adapters that support the NC-SI feature as the service port with NC-SI enabled.
- Enabling, disabling, and setting a virtual local area network (VLAN) ID for this port. The VLAN ID is **0** and disabled by default.
- Configuring IPv4 addresses (IPv4 address, subnet mask, and gateway) and IPv6 addresses (IPv6 address, prefix length, and gateway) for this port.

Energy Efficiency

- The server supports 80 Plus Platinum/Titanium PSUs of different energy efficiency levels. The PSU efficiency reaches 96% at 50% load.
- Compared with the last-generation product, third-generation Intel® Xeon® Scalable processor greatly improves the performance.
- Active/standby power supply and HVDC power supply are supported, improving the efficiency of the power supply system.
- Efficient voltage regulator-down (VRD) power supplies for boards minimize the energy loss from DC/DC power conversion.
- Intel Intelligent Power Capability allows the processor logic unit to be powered on or off based on requirements.
- Staggered spin-up of drives reduces the server boot power consumption.
- The server supports intelligent frequency scaling of processors for energy conservation and consumption reduction.
- SSDs consume 80% less power than HDDs.
- The quadrilateral ventilation holes on the node panel provide higher ventilation density than round holes, increasing the system cooling efficiency.
- The low-voltage third-generation Intel® Xeon® Scalable Ice Lake processors consume less energy, ideally suited for data centers and telecommunications environments constrained by power and thermal limitations.

 Copyright © xFusion Digital Technologies Co., Ltd.

3 Physical Structure

Figure 3-1 XH321 V6 physical structure

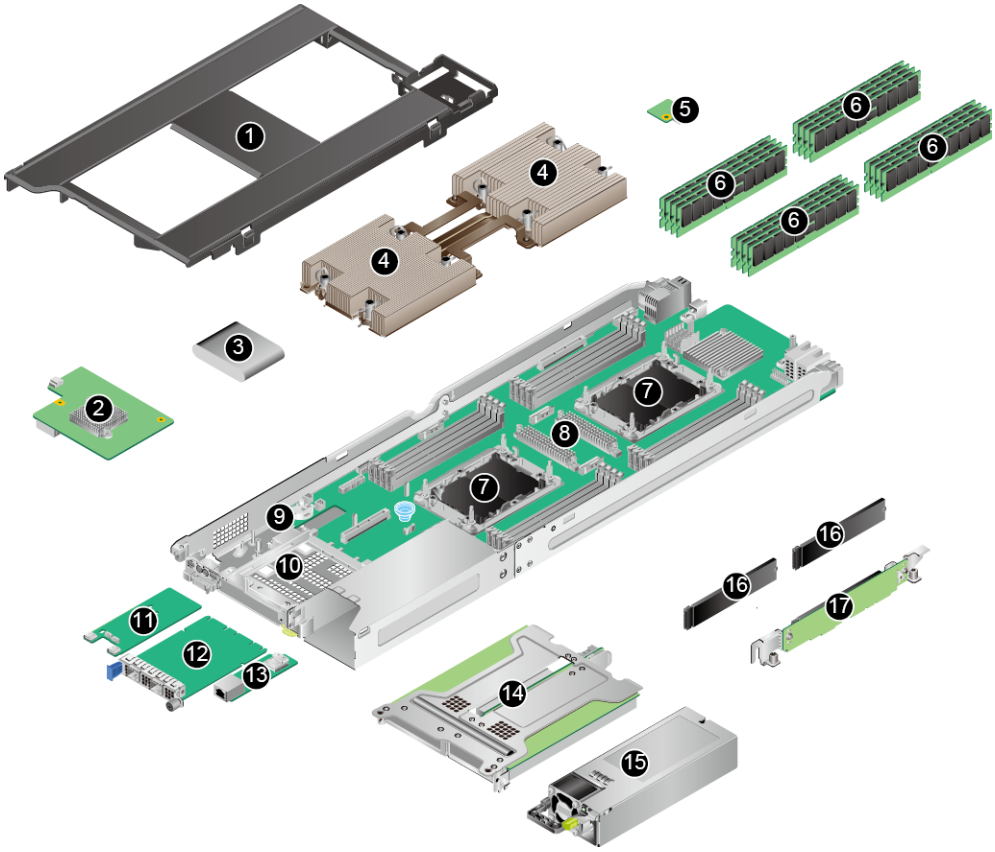

1	Air duct	2	Screw-in RAID controller card
3	Supercapacitor	4	Processor heat sinks
5	TPM/TCM	6	Memory modules
7	Processor	8	Mainboard
9	Coin battery	10	Server node case

 Copyright © xFusion Digital Technologies Co., Ltd.

11	I/O board	12	OCP 3.0 network adapter
13	Management network port board	14	PCIe riser module
15	Power supply unit (PSU)	16	M.2 SSD
17	M.2 riser card	-	-

 Copyright © xFusion Digital Technologies Co., Ltd.

4 Logical Structure

Figure 4-1 XH321 V6 logical structure

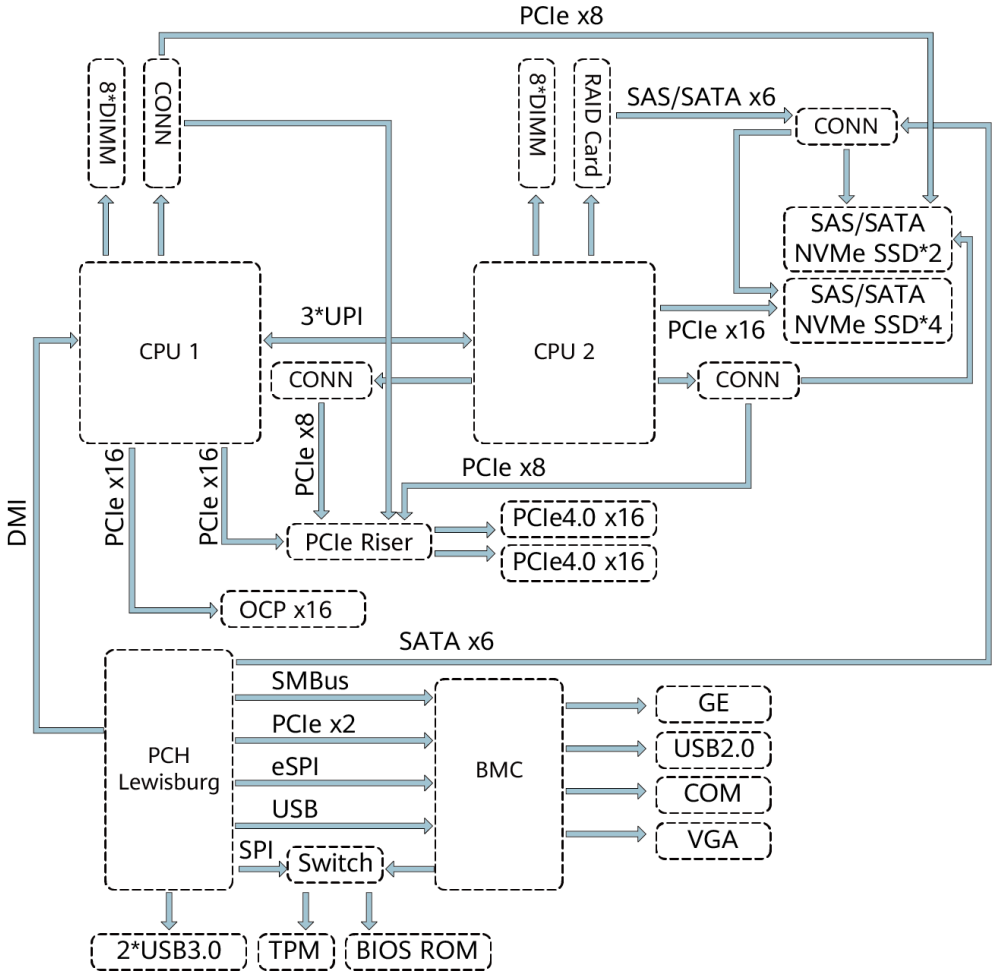

NOTE

- CPU 1 is connected to two NVMe SSDs or two pass-through PCIe riser cards through PCIe x8.
- CPU 2 is connected to the PCIe riser card or two pass-through NVMe SSDs through PCIe x8.

 Copyright © xFusion Digital Technologies Co., Ltd.

- The server supports one or two third-generation Intel® Xeon® Scalable Ice Lake processors.
- The server supports up to 16 memory modules.
- The CPUs (processors) interconnect with each other through three UPI links at a speed of up to 11.2 GT/s.
- The PCIe riser module connects to the processors through PCIe buses to provide two PCIe slots.
- CPU1 supports one OCP 3.0 network adapter.
- The screw-in RAID controller card connects to the mainboard through a high-speed connector, and the mainboard is connected to drives through the middle module to support different local storage configurations.
- The LBG-R Platform Controller Hub (PCH) is integrated on the mainboard to support the USB 3.0 port.
- The BMC integrates the graphics card, video compression, and virtual media components to provide device management functions, such as power control, slot ID acquisition, power supply detection, and KVM over IP.
- The BMC management chip integrated on the mainboard supports ports such as a video graphic array (VGA) port, a management network port, and a serial port.

NOTE

The VGA port is on the right mounting ear of the X6000 V6 chassis. For details, see "Hardware Description > Front Panel > Ports" in the **FusionServer X6000 V6 Server User Guide**.

 Copyright © xFusion Digital Technologies Co., Ltd.

5 Hardware Description

5.1 Front Panel
5.2 Processors
5.3 Memory
5.4 Storage
5.5 Network
5.6 I/O Expansion
5.7 PSUs
5.8 Boards

5.1 Front Panel

5.1.1 Appearance

Figure 5-1 Front view

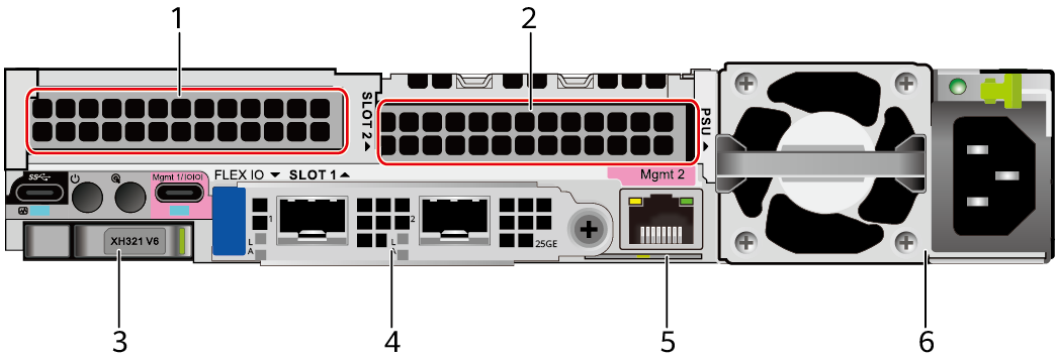

1	PCIe card 1	2	PCIe card 2

 Copyright © xFusion Digital Technologies Co., Ltd.

3	Node ejector lever	4	FlexIO card **NOTE** The FlexIO card slot supports only OCP 3.0 network adapters.
5	Slide-out label plate (with an SN label)	6	PSU

5.1.2 Indicators and Buttons

Indicator and Button Positions

Figure 5-2 Indicators and buttons on the front panel

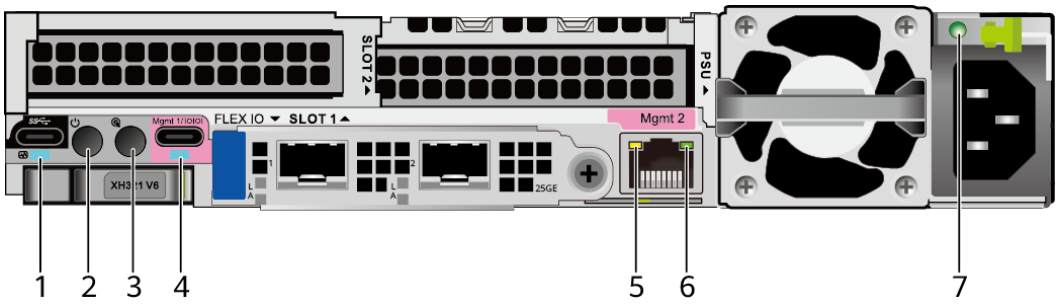

1	Health status indicator	2	Power button/indicator
3	UID button/indicator	4	iBMC direct connect management port indicator
5	Data transmission status indicator of the management network port	6	Connection status indicator of the management network port
7	PSU indicator	-	-

 Copyright © xFusion Digital Technologies Co., Ltd.

Indicator and Button Description

Table 5-1 Indicators and buttons on the front panel

Silkscreen	Indicator/ Button	Description
	Health status indicator	● Off: The device is powered off or is faulty. ● Blinking red at 1 Hz: A major alarm has been generated on the system. ● Blinking red at 5 Hz: A critical alarm has been generated on the system. ● Steady green: The device is operating properly.
	Power button/ indicator	Power indicator: ● Off: The node is not powered on. ● Steady green: The node is in the power-on state. ● Blinking yellow: The iBMC is starting. The power button is locked and cannot be pressed. The iBMC is started in about 1 minute, and then the power indicator is steady yellow. ● Steady yellow: The node is standby. Power button: ● When the device is powered on, you can press this button to gracefully shut down the OS. **NOTE** For different OSs, you may need to shut down the OS as prompted. ● When the device is powered on, you can hold down this button for 6 seconds to forcibly power off the device. ● When the power indicator is steady yellow, you can press this button to power on the device.

 Copyright © xFusion Digital Technologies Co., Ltd.

Silkscreen	Indicator/ Button	Description
	UID button/ indicator	The UID button/indicator helps identify and locate a device. UID indicator: ● Off: The device is not being located. ● Blinking or steady blue: The device is being located. UID button: ● You can control the UID indicator status by pressing the UID button or using the iBMC. ● You can press this button to turn on or off the UID indicator. ● You can press and hold down this button for 4 to 6 seconds to reset the iBMC.
-	iBMC direct connect management port indicator	Indicates the status when the iBMC direct connect management port connects to a terminal (local PC or Android mobile phone): ● Off: No terminal is connected. ● Blinking green at short intervals for 3 seconds and then off: The port is disabled. ● Steady green: The terminal is connected.
-	Data transmission status indicator for the management network port	● Off: No data is being transmitted. ● Blinking yellow: Data is being transmitted.
-	Connection status indicator of the management network port	● Off: The network port is not connected. ● Steady green: The network port is connected properly.

 Copyright © xFusion Digital Technologies Co., Ltd.

Silkscreen	Indicator/ Button	Description
-	PSU indicator	● Off: No power is supplied. ● Blinking green at 1 Hz: – The input is normal, and the server is in the standby state. – The input is overvoltage or undervoltage. – The PSU is in deep hibernation mode. ● Blinking green at 4 Hz: The firmware is being upgraded online. ● Steady green: The power input and output are normal. ● Steady orange: The input is normal but there is no output. **NOTE** The possible causes of no power output are as follows: ● Power supply overtemperature protection ● Power output overcurrent or short-circuit ● Output overvoltage ● Short-circuit protection ● Device failure (excluding failure of all devices) ● Steady red: The output overcurrent occurs.

5.1.3 Ports

Port Positions

Figure 5-3 Ports on the front panel

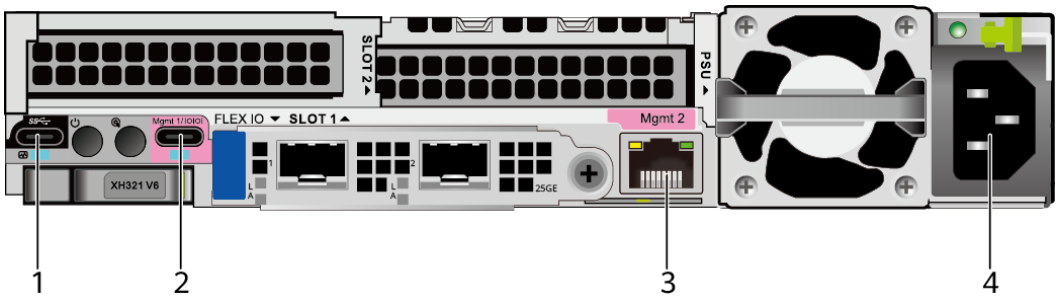

1	USB 3.0 Type-C port	2	iBMC direct connect management port/ debugging serial port
3	Management network port	4	PSU socket

 Copyright © xFusion Digital Technologies Co., Ltd.

Port Description

Table 5-2 Ports on the front panel

Port	Type	Quantity	Description
USB 3.0 Type-C port	USB Type-C	1	Used to connect to a USB 3.0 device. **NOTICE** ● The maximum current is 1.2 A for an external USB device. ● Before connecting an external USB device, ensure that the USB device functions properly. Otherwise, it may adversely impact the server. ● Supports one or two USB 3.0 port, depending on the cable type.
iBMC direct connect management port/ debugging serial port	USB Type-C **NOTE** The USB 2.0 protocol is supported.	1	● Uses a USB Type-C cable to connect a local PC or mobile phone to the server node iBMC to monitor and manage the system. **NOTE** Only local PCs running Windows 10 and mobile phones running Android are supported. ● To log in to the iBMC from the local PC, enter **https:***//IIP address of the iBMC management network port* in the address box of the browser on the local PC. ● When accessing the iBMC through a mobile phone, you need to use the mobile application FusionMobile to access the iBMC. For details, see the **FusionMobile User Guide**. ● Connects to a Type-C-to-serial port (RJ45) to implement the debugging function.

 Copyright © xFusion Digital Technologies Co., Ltd.

Port	Type	Quantity	Description
Management network port	RJ45	1	iBMC management network port, which is used to manage the server. **NOTE** ● The management network port is a GE port that supports 100 Mbit/s and 1000 Mbit/s auto-negotiation. ● The iBMC management network ports cannot be connected to power over Ethernet (PoE) devices (such as a switch with PoE enabled). Connecting a LOM port to a PoE device may cause link communication failure or even damage the NIC.
PSU socket	-	1	Used to connect to a power distribution unit (PDU) through a power cable. You can select the PSUs as required. **NOTE** When determining the PSUs, ensure that the sum of rated power of all PSUs is greater than that of the server.

5.1.4 Installation Positions

The XH321 V6 nodes are installed in the 4 slots on the rear of a 2 U X6000 V6 chassis, which can house a maximum of 4 XH321 V6 nodes.

Figure 5-4 Installation positions

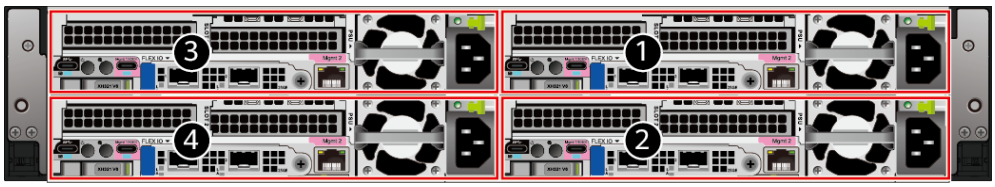

NOTE

When installing a server node, ensure that the exposed connectors on the front of the server node do not collide with the chassis or other objects.

5.2 Processors

- The server supports one or two processors.

- If only one processor is required, install it in socket CPU1.
- Processors of the same model must be used in a server.
- Contact your local sales representative or see "Search Parts" in the **Compatibility Checker** to determine the components to be used.
- Configured with a conjoined vapor chamber (VC) heat sink.

Figure 5-5 Processor positions

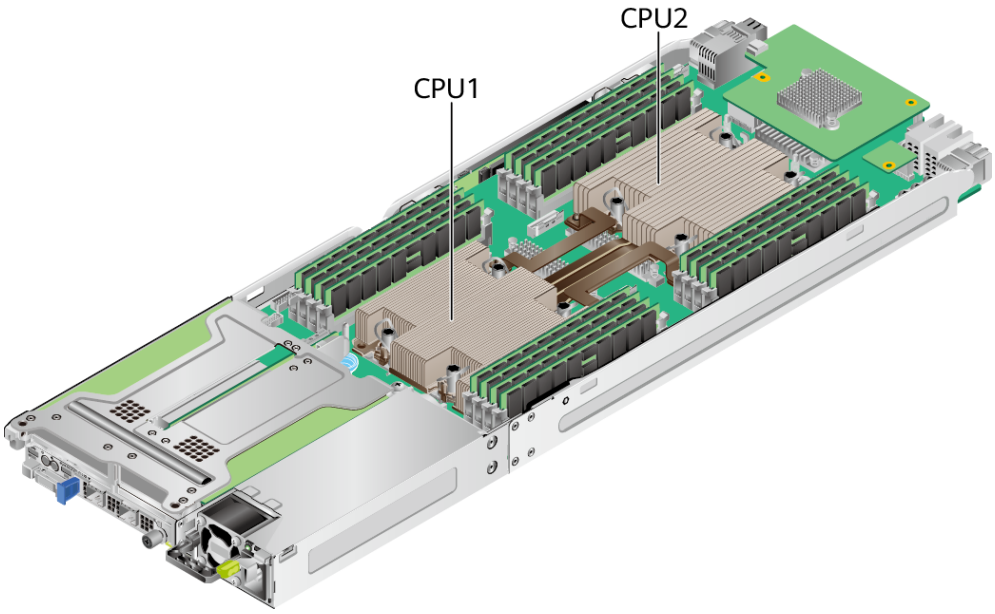

5.3 Memory

5.3.1 DDR4 Memory

5.3.1.1 Memory Identifier

You can determine the memory module properties based on the label attached to the memory module.

Figure 5-6 Memory identifier

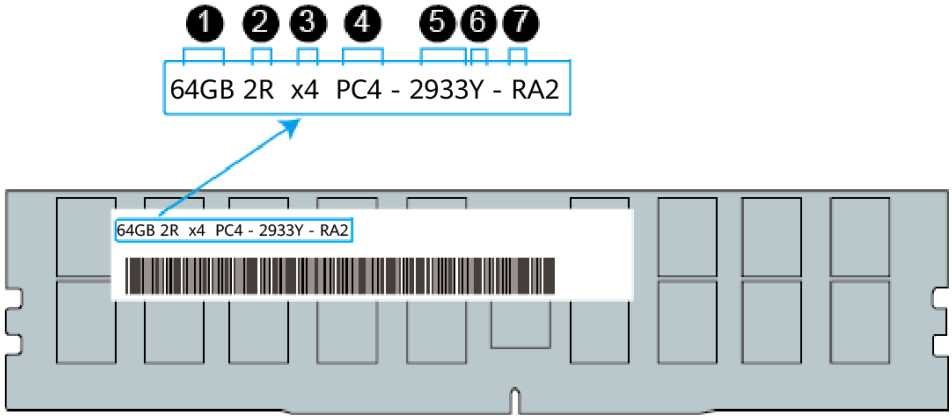

Callout	Description	Example
1	Capacity	● 16 GB ● 32 GB ● 64 GB ● 128 GB
2	rank(s)	● 1R = Single rank ● 2R = Dual rank ● 4R = Quad rank
3	Data width on the DRAM	● x4: 4-bit ● x8: 8-bit
4	Type of the memory interface	● PC4 = DDR4
5	Maximum memory speed	● 2933 MT/S ● 3200 MT/S
6	Memory latency parameters (CL-tRCD-tRP)	● W = 20-20-20 ● Y = 21-21-21 ● AA = 22-22-22
7	DIMM type	● R = RDIMM ● L = LRDIMM

5.3.1.2 Memory Subsystem Architecture

A server provides 16 memory slots. Each processor integrates eight memory channels.

Table 5-3 Memory channels

CPU	Memory Channel	Memory Slot
CPU1	A	DIMM000(A)
	B	DIMM010(B)
	C	DIMM020(C)
	D	DIMM030(D)
	E	DIMM040(E)
	F	DIMM050(F)
	G	DIMM060(G)
	H	DIMM070(H)
CPU2	A	DIMM100(A)

 Copyright © xFusion Digital Technologies Co., Ltd.

CPU	Memory Channel	Memory Slot
	B	DIMM110(B)
	C	DIMM120(C)
	D	DIMM130(D)
	E	DIMM140(E)
	F	DIMM150(F)
	G	DIMM160(G)
	H	DIMM170(H)

5.3.1.3 Memory Compatibility

Observe the following rules when configuring DDR4 memory modules:

NOTICE

- A server must use DDR4 memory modules of the same part number (P/N code), and the memory speed is the minimum value of the following items:
  - Memory speed supported by a CPU
  - Maximum operating speed of a memory module
- The DDR4 DIMMs of different types (RDIMM and LRDIMM) and specifications (capacity, bit width, rank, and height) cannot be used together.
- For details about component options, consult the local sales representatives.

- The memory can be used with the third-generation Intel® Xeon® Scalable Ice Lake processors. The maximum memory capacity supported by all processor models is the same.
- Total memory capacity = Total capacity of all DDR4 memory modules

  NOTICE

  The total memory capacity cannot exceed the maximum memory capacity supported by the CPUs.

- For details about the capacity type of a single memory module, see "Search Parts" in the **Compatibility Checker**.
- The maximum number of memory modules supported depends on the memory type and rank quantity.

 Copyright © xFusion Digital Technologies Co., Ltd.

NOTE

Each memory channel supports a maximum of 8 ranks. The number of memory modules supported by each channel varies depending on the number of ranks supported by each channel:

Number of memory modules supported by each channel ≤ Number of ranks supported by each memory channel/Number of ranks supported by each memory module

- A memory channel supports more than eight ranks for LRDIMMs.

NOTE

A quad-rank LRDIMM generates the same electrical load as a single-rank RDIMM on a memory bus.

Table 5-4 DDR4 memory specifications

Parameter		Specifications
Maximum capacity per DDR4 memory module (GB)		128
Rated speed (MT/s)		3200
Operating voltage (V)		1.2
Maximum number of DDR4 memory modules in a node[a]		16
Maximum DDR4 memory capacity of the node (GB)[a]		2048
Maximum operating speed (MT/s)	1DPC[b]	3200
● a: The maximum number of DDR4 memory modules is based on dual-processor configuration. The value is halved for a server with only one processor. ● b: DPC (DIMM per channel) indicates the number of memory modules per channel. ● The information listed in this table is for reference only. For details, consult the local sales representative.		

5.3.1.4 DIMM Installation Rules

Observe the following when configuring DDR4 memory modules:

- Install memory modules only when corresponding processors are installed.
- Do not install LRDIMMs and RDIMMs in the same server.
- Install filler memory modules in vacant slots.

Observe the following when configuring DDR4 memory modules in specific operating mode:

- Memory sparing mode
  - Comply with the general installation guidelines.

 Copyright © xFusion Digital Technologies Co., Ltd.

  - Each memory channel must have a valid online spare configuration.
  - The channels can have different online spare configurations.
  - Each populated channel must have a spare rank.
- Memory mirroring mode
  - Comply with the general installation guidelines.
  - Each processor supports four integrated memory controllers (IMCs), and each IMC has two channels for installing memory modules. The installed memory modules must be identical in size and organization.
  - For a multi-processor configuration, each processor must have a valid memory mirroring configuration.
- Memory scrubbing mode
  - Comply with the general installation guidelines.

5.3.1.5 Memory Installation Positions

A server supports a maximum of 16 DDR4 memory modules. To maximize performance, balance the total memory capacity between the installed processors and to load the channels similarly whenever possible.

Observe the memory module installation rules when configuring memory modules. For details, see **Server Assembly Guide**.

Figure 5-7 Memory slots

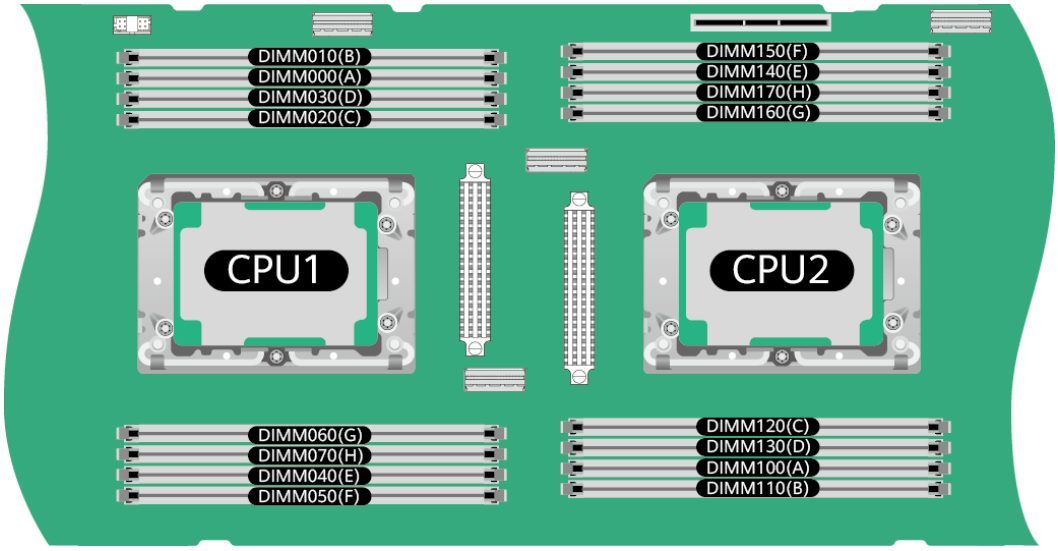

 Copyright © xFusion Digital Technologies Co., Ltd.

Figure 5-8 DDR4 memory module installation guidelines (1 processor)

CPU1	Channel	DIMM Slot	Number of DDR4 DIMMs (✓: recommended)				
			✓	✓	✓	✓	✓
			1	2	4	6	8
CPU1	A	DIMM000(A)	●	●	●	●	●
	B	DIMM010(B)				●	●
	C	DIMM020(C)			●	●	●
	D	DIMM030(D)					●
	E	DIMM040(E)		●	●	●	●
	F	DIMM050(F)				●	●
	G	DIMM060(G)			●	●	●
	H	DIMM070(H)					●

Figure 5-9 DDR4 memory module installation guidelines (2 processors)

CPU	Channel	DIMM Slot	Number of DDR4 DIMMs (✓: recommended)				
			✓	✓	✓	✓	✓
			2	4	8	12	16
CPU1	A	DIMM000(A)	●	●	●	●	●
	B	DIMM010(B)				●	●
	C	DIMM020(C)			●	●	●
	D	DIMM030(D)					●
	E	DIMM040(E)		●	●	●	●
	F	DIMM050(F)				●	●
	G	DIMM060(G)			●	●	●
	H	DIMM070(H)					●
CPU2	A	DIMM100(A)	●	●	●	●	●
	B	DIMM110(B)				●	●
	C	DIMM120(C)			●	●	●
	D	DIMM130(D)					●
	E	DIMM140(E)		●	●	●	●
	F	DIMM150(F)				●	●
	G	DIMM160(G)			●	●	●
	H	DIMM170(H)					●

 Copyright © xFusion Digital Technologies Co., Ltd.

5.3.1.6 Memory Protection Technologies

The following memory protection technologies are supported:

- ECC
- Memory Mirroring
- Memory Single Device Data Correction (SDDC)
- Failed DIMM Isolation
- Memory Thermal Throttling
- Command/Address Parity Check and Retry
- Memory Demand/Patrol Scrubbing
- Memory Data Scrambling
- Post Package Repair (PPR)
- Write Data CRC Protection
- Adaptive Data Correction - Single Region (ADC-SR)
- Adaptive Double Device Data Correction - Multiple Region (ADDDC-MR)
- Partial Cache Line Sparing (PCLS)

5.4 Storage

5.4.1 Drive Configurations

Table 5-5 Drive configuration

Configuration	Maximum Drives	Drive Management Mode
Built-in Drive	2 ● Slots 1 and 2 support only M.2 SSDs[a].	-
● a: The M.2 SSDs come in two sizes 2242 and 2280, and support the SATA interface. ● Contact your local sales representative or see "Search Parts" in the **Compatibility Checker** to determine the components to be used.		

 Copyright © xFusion Digital Technologies Co., Ltd.

5.4.2 Drive Numbering

Figure 5-10 Drive numbering

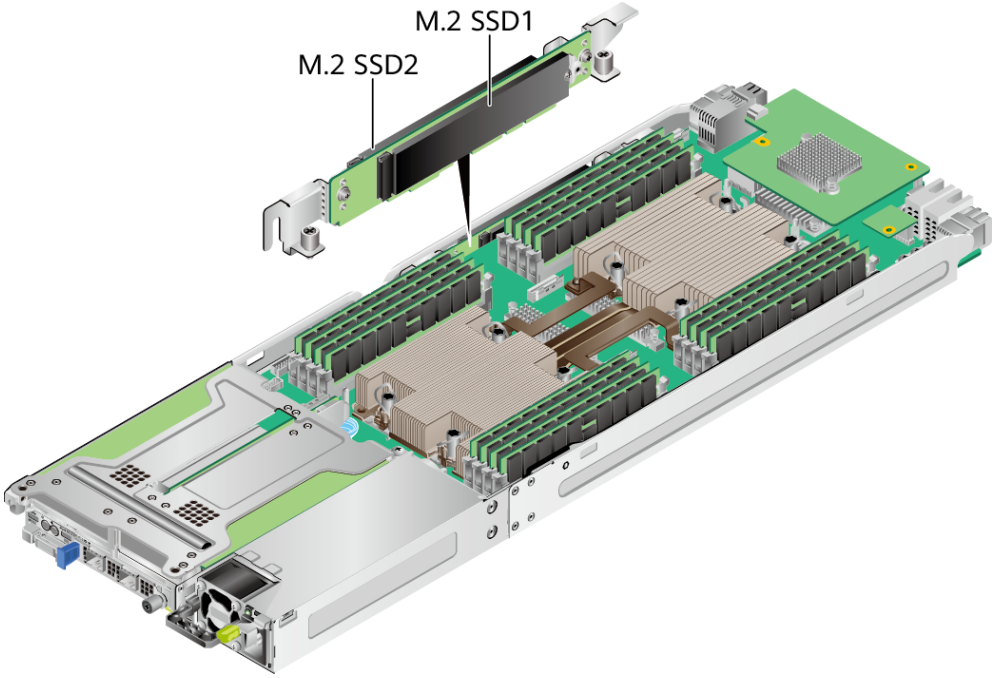

5.4.3 RAID Controller Card

The RAID controller card supports RAID configuration, RAID level migration, and drive roaming.

- Contact your local sales representative or see "Search Parts" in the **Compatibility Checker** to determine the components to be used.
- For details about the RAID controller card, see ***V6 Server RAID Controller Card User Guide***.

NOTICE

A pass-through card provides a channel for connecting SATA drives on the current node to the PCH. If no RAID controller card is configured, a pass-through card is required.

5.5 Network

5.5.1 OCP 3.0 Network Adapter

OCP 3.0 network adapters provide network expansion capabilities.

- The FlexIO slot supports only the OCP 3.0 network adapter, which can be configured as required.

 Copyright © xFusion Digital Technologies Co., Ltd.

- Contact your local sales representative or see "Search Parts" in the **Compatibility Checker** to determine the components to be used.
- For details about the OCP 3.0 network adapter, see the documents of each OCP 3.0 network adapter.

5.6 I/O Expansion

5.6.1 PCIe Cards

PCIe cards provide ease of expandability and connection.

- Four PCIe 4.0 slots are supported, including one dedicated PCIe slot for a RAID controller card, one dedicated FLEX I/O slot for an OCP 3.0 NIC, and two standard PCIe slots.
- Contact your local sales representative or see "Search Parts" in the **Compatibility Checker** to determine the components to be used.
- When IB cards are used to build an IB network, ensure that the IPoIB modes of the IB cards at both ends of the network are the same. For details, contact technical support.

5.6.2 PCIe Slots

PCIe Slots

Figure 5-11 PCIe slots

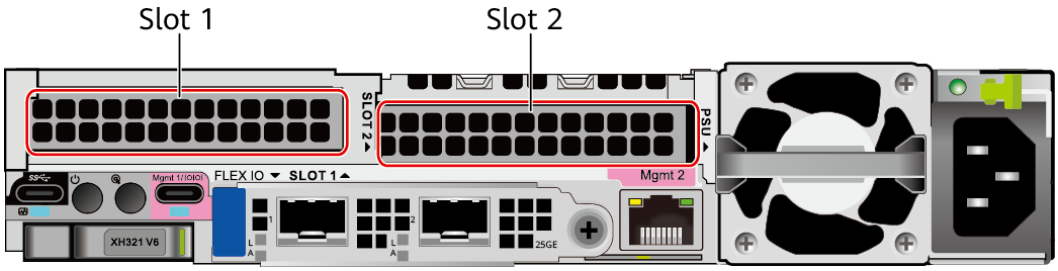

PCIe Riser Module

Provides PCIe slots 1 and 2.

 Copyright © xFusion Digital Technologies Co., Ltd.

Figure 5-12 PCIe riser module

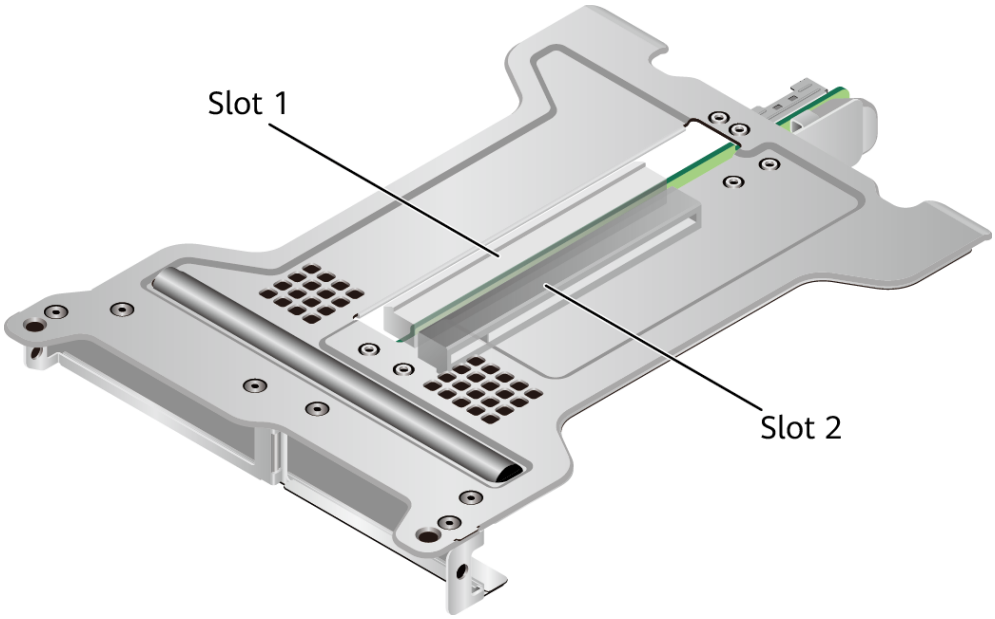

5.6.3 PCIe Slot Description

NOTE

The PCIe slots mapping to a vacant CPU socket are unavailable.

Table 5-6 PCIe slot description

PCIe Slot	CPU	PCIe Standards	Connector Width	Bus Width	Port No.	Root Port (B/D/F)	Slot Size
Screw-in RAID controller card	CPU2	PCIe 4.0	x8	x8	Port0 C	98/0/0	-
OCP 3.0 network adapter	CPU1	PCIe 4.0	x16	x16	Port0 A	17/0/0	-
Slot1	CPU2	PCIe 4.0	x16	x16	Port3 A	31/0/0	HHHL
Slot2	CPU1	PCIe 4.0	x16	x16	Port1 A	B1/0/0	HHHL

 Copyright © xFusion Digital Technologies Co., Ltd.

PCIe Slot	CPU	PCIe Standards	Connector Width	Bus Width	Port No.	Root Port (B/D/F)	Slot Size
● The B/D/F (Bus/Device/Function Number) is the default value when the server is fully configured with PCIe cards. The value may differ if the server is not fully configured with PCIe cards or if a PCIe card with a PCI bridge is configured. ● The PCIe x16 slots are compatible with PCIe x16, PCIe x8, PCIe x4, and PCIe x1 cards. The PCIe cards are not forward compatible. That is, the PCIe slot width cannot be smaller than the PCIe card link width. ● The PCIe x16 bus in the slot 1 is connected to CPU 2 through two x8 cables. One of the cables can be connected to the PCIe x8 bus connector of CPU 1, so the slot 1 supports the multi-host feature (the x16 bus of the slot is connected to two processors through two x8 cables).							

5.7 PSUs

- The node supports one PSU.
- The server supports AC or DC PSUs.
- If the number of PSUs configured for the server is greater than or equal to 2, the PSU on a single node supports hot swap.
- The server supports two PSUs in 1+1 redundancy, or four PSUs in 2+2 redundancy.

  NOTE

  If the server requires two PSUs, install them on the first and third nodes.
- PSUs of the same P/N code must be used in a server.
- The PSUs are protected against short circuit. Double-pole fuse is provided for the PSUs with dual input live wires.
- If the DC power supply is used, purchase the DC power supply that meets the requirements of the safety standards or the DC power supply that has passed the CCC certification.
- Contact your local sales representative or see "Search Parts" in the **Compatibility Checker** to determine the components to be used.

Figure 5-13 PSU positions

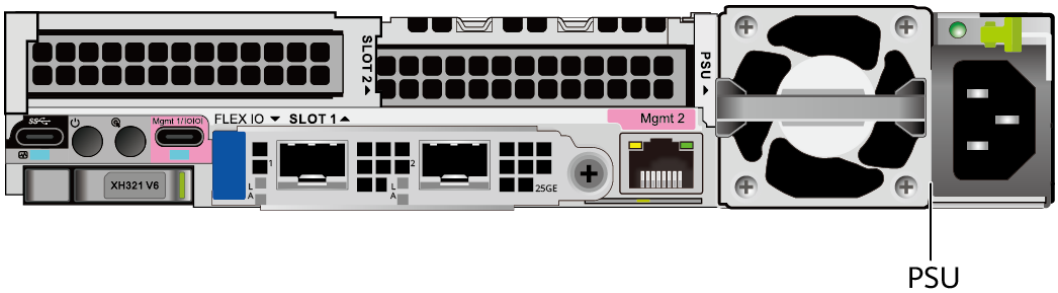

5.8 Boards

5.8.1 Mainboard

Figure 5-14 XH321 V6 mainboard

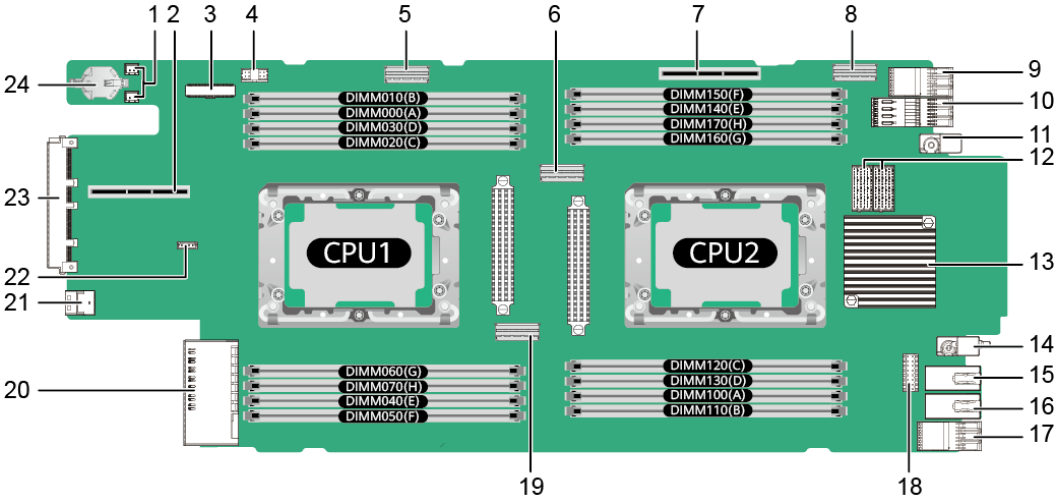

1	Liquid leakage sensor connector [a] (LIQUID DET/ J7&J8)	2	PCIe riser card connector (PCIE RISER x16/J31)
3	Node I/O card cable connector (IO CONN/J45)	4	NC-SI connector (NCSI CONN/J114)
5	CPU2 Slimline4 x8 high-speed connector (SLIMLINE4 (CPU2)/J32)	6	CPU2 Slimline3 x8 high-speed connector (SLIMLINE3 (CPU2)/J4)
7	M.2 riser card connector (M. 2 RISER X8/J14)	8	Slimline2 x8 high-speed connector (SLIMLINE2/ J84)
9	4-pair x8 high-speed connector (J18)	10	6-pair x8 high-speed connector (J19)
11	Left guide sleeve	12	Screw-in RAID controller card or pass-through card connector (RAID CARD/ J9&J86)
13	PCH heat sink (PCH/U55)	14	Right guide sleeve
15	PSU GND copper clamp connector (GND/J65)	16	PSU 12 V copper clamp connector (12V/J63)

 Copyright © xFusion Digital Technologies Co., Ltd.

17	4-pair x8 high-speed connector (J21)	18	TPM/TCM connector (J10)
19	CPU1 Slimline1 x8 high-speed connector (SLIMLINE1 (CPU1)/J11)	20	PSU connector (PSU1/J28)
21	GE management network port board connector (GE CONN/J27)	22	VROC key connector (SOFT RAID KEY/J3)[a]
23	OCP 3.0 network adapter connector (OCP CONN/J108)	24	Cell battery holder (U9)
a: The port is reserved.			

 Copyright © xFusion Digital Technologies Co., Ltd.

6 Product Specifications

6.1 Technical Specifications
6.2 Environmental Specifications
6.3 Physical Specifications

6.1 Technical Specifications

Table 6-1 Technical specifications

Component	Specifications
Form factor	1U half-width dual-socket air-cooled server node
Chipset	Intel® C621A
Processor	Supports one or two processors. ● Third-generation Intel® Xeon® Scalable Ice Lake processors ● Built-in memory controller and eight memory channels per processor ● Built-in PCIe controller, supporting PCIe 4.0 and 64 lanes per processor ● Three UPI buses between processors, providing up to 11.2 GT/s transmission per channel ● Up to 40 cores ● Max. 3.6 GHz ● Min. 1.5 MB L3 cache per core ● Max. 270 W TDP **NOTE** The preceding information is for reference only. For details, see "Search Parts" in the **Compatibility Checker**.

 Copyright © xFusion Digital Technologies Co., Ltd.

Component	Specifications
DIMM	Up to 16 DDR4 memory modules ● Max. 3200 MT/s memory speed ● RDIMM and LRDIMM support ● The DDR4 memory modules of different types (RDIMM and LRDIMM) and specifications (capacity, bit width, rank, and height) cannot be used together. ● A server must use DDR4 memory modules of the same P/N code. **NOTE** The preceding information is for reference only. For details, see "Search Parts" in the **Compatibility Checker**.

Storage	Supports two M.2 SSDs. For details, see **5.4.1 Drive Configurations**.
	NOTE
	● The M.2 SSD is managed and configured on the PCH, and is used only as a boot device for installing the OS. Small-capacity (32 GB or 64 GB) M.2 SSDs do not support logging due to poor endurance. If a small-capacity M.2 SSD is used as the boot device, a dedicated log drive or log server is required for logging. For example, you can dump VMware logs in either of the following ways:
	  ● Redirect **/scratch**. For details, see **https://kb.vmware.com/s/article/1033696**.
	  ● Configure syslog. For details, see **https://kb.vmware.com/s/article/2003322**.
	● The M.2 SSD cannot be used to store data due to poor endurance. In write-intensive applications, the M.2 SSD will wear out in a short time.
	If you want to use SSDs or HDDs as data storage devices, use enterprise-level SSDs or HDDs with high DWPD.
	● The M.2 SSD is not recommended for write-intensive service software due to poor endurance.
	● Do not use M.2 SSDs for cache.
	● Supports a variety of RAID controller cards. For details, see "Search Parts" in the **Compatibility Checker**.
	  – The RAID controller card supports RAID configuration, RAID level migration, and drive roaming.
	For details about the RAID controller card, see **V6 Server RAID Controller Card User Guide**.

 Copyright © xFusion Digital Technologies Co., Ltd.

Component	Specifications
Network	Supports expansion capability of multiple types of networks. ● OCP 3.0 network adapter – The FlexIO slot supports only the OCP 3.0 network adapter, which can be configured as required. – Supports orderly hot swap. **NOTE** The OCP 3.0 network adapter supports orderly hot swap only when the VMD function is disabled. – Supports a variety of OCP 3.0 network adapters. For details, see "Search Parts" in the **Compatibility Checker**.
I/O expansion	Supports 4 PCIe slots. ● One PCIe slot dedicated for a screw-in RAID controller card, one FlexIO slot dedicated for an OCP 3.0 network adapter, and two PCIe slots for standard PCIe cards. For details, see **5.6.2 PCIe Slots** and **5.6.3 PCIe Slot Description**. **NOTE** The preceding information is for reference only. For details, see "Search Parts" in the **Compatibility Checker**.
Port	Supports a variety of ports. ● Ports on the front panel: – One USB 3.0 Type-C port – One USB 2.0 Type-C iBMC direct connect management port/debugging serial port – One RJ45 management network port – One PSU socket ● Built-in ports – One 2 x M.2 SSD expansion port
Video card	An SM750 video chip with 32 MB display memory is integrated on the mainboard. The maximum display resolution is 1920 x 1200 at 60 Hz with 16 M colors. **NOTE** The integrated video card can provide the maximum display resolution (1920 x 1200) only after the video card driver matching the operating system version is installed. Otherwise, only the default resolution supported by the operating system is provided.

 Copyright © xFusion Digital Technologies Co., Ltd.

Component	Specifications
System management	• UEFI • iBMC • NC-SI • Integration with third-party management systems • Aggregated management of multiple nodes • Integration with FusionDirector
Security feature	• Power-on password • Administrator password • TPM/TCM • Secure boot

6.2 Environmental Specifications

Table 6-2 Environmental specifications

Category	Specifications
Temperature	• Operating temperature: 5°C to 45°C (41°F to 113°F) (ASHRAE Class A1 to A4 compliant) • Storage temperature (within three months): –30°C to +60°C (–22°F to 140°F) • Storage temperature (within six months): –15°C to +45°C (5°F to 113°F) • Storage temperature (within one year): –10°C to +35°C (14°F to 95°F) • Maximum rate of temperature change: 20°C (36°F) per hour, 5°C (9°F) per 15 minutes **NOTE** The highest operating temperature varies depending on the server configuration. For details, see **A.3 Operating Temperature Limitations**.
Relative Humidity (RH, Non-Condensing)	• Operating humidity: 8% to 90% • Storage humidity (within three months): 8% to 85% • Storage humidity (within six months): 8% to 80% • Storage humidity (within one year): 20% to 75% • Maximum humidity change rate: 20%/h

 Copyright © xFusion Digital Technologies Co., Ltd.

Category	Specifications
Altitude	≤ 3050 m (10006.56 ft) ● When the server configuration complies with ASHRAE Classes A1 and A2 and the altitude is above 900 m (2952.76 ft), the highest operating temperature decreases by 1°C (1.8°F) for every increase of 300 m (984.25 ft). ● When the server configuration complies with ASHRAE Class A3 and the altitude is above 900 m (2952.76 ft), the highest operating temperature decreases by 1°C (1.8°F) for every increase of 175 m (574.14 ft). ● When the server configuration complies with ASHRAE Class A4 and the altitude is above 900 m (2952.76 ft), the highest operating temperature decreases by 1°C (1.8°F) for every increase of 125 m (410.1 ft). ● HDDs cannot be used at an altitude of over 3050 m (10,006.44 ft).
Corrosive air pollutant	Maximum corrosion product thickness growth rate: ● Copper corrosion rate test: 300 Å/month (meeting level G1 requirements of the ANSI/ISA-71.04-2013 standard on gaseous corrosion) ● Silver corrosion rate test: 200 Å/month
Particle pollutant	● The equipment room environment meets the requirements of ISO 14664-1 Class 8. ● There is no explosive, conductive, magnetic, or corrosive dust in the equipment room. **NOTE** It is recommended that the particulate pollutants in the equipment room be monitored by a professional organization.

NOTE

SSDs and HDDs (including NL-SAS, SAS, and SATA) cannot be preserved for a long time in the power-off state. Data may be lost or faults may occur if the preservation duration exceeds the specified maximum duration. When drives are preserved under the storage temperature and humidity specified in the preceding table, the following preservation time is recommended:

- Maximum preservation duration of SSDs:
  - 12 months in power-off state without data stored
  - 3 months in power-off state with data stored
- Maximum preservation duration of HDDs:
  - 6 months in unpacked/packed and powered-off state
- The maximum preservation duration is determined according to the preservation specifications provided by drive vendors. For details, see the manuals provided by drive vendors.

 Copyright © xFusion Digital Technologies Co., Ltd.

6.3 Physical Specifications

Table 6-3 Physical specifications

Item	Description
Dimensions (H x W x D)	40.7 mm × 218.7 mm × 633.5 mm (1.60 in. x 8.61 in. x 24.94 in.) **Figure 6-1** Physical dimensions 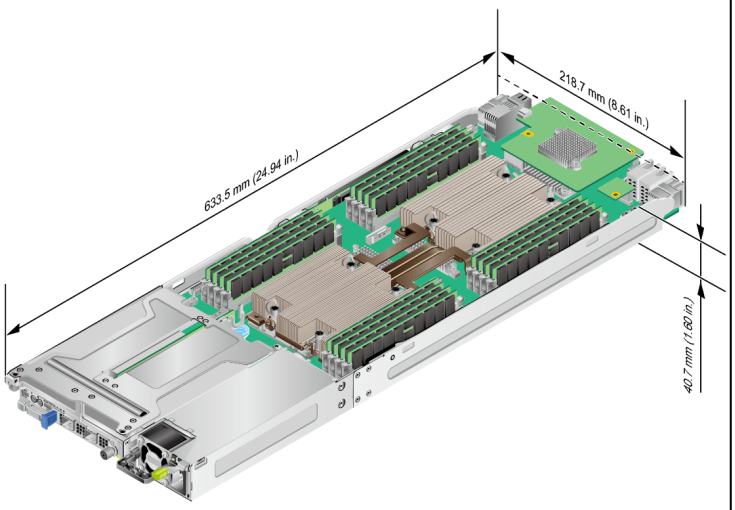 **NOTE** **Figure 6-1** shows how to measure the physical dimensions of a server node.
Weight in full configuration	• Net weight: 6.5 kg (14.33 lb) • Packing material weight: 3.2 kg (7.05 lb)
Power consumption	The power consumption parameters vary with hardware configurations (including the configurations complying with EU ErP). Use the **Power Calculator** to obtain specific information.

 Copyright © xFusion Digital Technologies Co., Ltd.

7 Software and Hardware Compatibility

Use the **Compatibility Checker** to obtain information about the operating systems and hardware supported.

NOTICE

- If incompatible components are used, the device may be abnormal. This fault is beyond the scope of technical support and warranty.
- The performance of servers is closely related to application software, basic middleware software, and hardware. The slight differences of the application software, middleware basic software, and hardware may cause performance inconsistency between the application layer and test software layer.
  - If the customer has requirements on the performance of specific application software, contact technical support to apply for POC tests in the pre-sales phase to determine detailed software and hardware configurations.
  - If the customer has requirements on hardware performance consistency, specify the specific configuration requirements (for example, specific drive models, RAID controller cards, or firmware versions) in the pre-sales phase.

 Copyright © xFusion Digital Technologies Co., Ltd.

8 Safety Instructions

8.1 Security

8.2 Maintenance and Warranty

8.1 Security

General Statement

- Comply with local laws and regulations when installing devices. These Safety Instructions are only a supplement.
- The "DANGER", "WARNING", and "CAUTION" information in this document does not represent all the safety instructions, but supplements to the safety instructions.
- Observe all safety instructions provided on the device labels when installing hardware. Follow them in conjunction with these Safety Instructions.
- Only qualified personnel are allowed to perform special tasks, such as performing high-voltage operations and driving a forklift.

WARNING

If this device works in a residential environment, the wireless interference may be generated.

Personal Safety

- This equipment is not suitable for use in places where children may be present.
- Only personnel certified or authorized are allowed to install equipment.
- Discontinue any dangerous operations and take protective measures. Report anything that could cause personal injury or device damage to a project supervisor.
- Do not move devices or install racks and power cables in hazardous weather conditions.

 Copyright © xFusion Digital Technologies Co., Ltd.

- Do not carry the weight that is over the maximum load per person allowed by local laws or regulations. Before moving or installing equipment, check the maximum equipment weight and arrange required personnel.
- Wear clean protective gloves, ESD clothing, a protective hat, and protective shoes, as shown in **Figure 8-1**.

Figure 8-1 Safety work wear

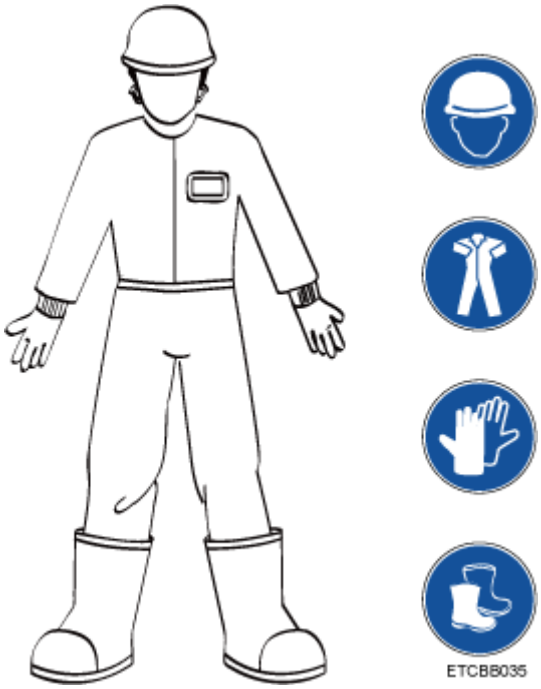

- Before touching a device, wear ESD clothing and gloves (or wrist strap), and remove any conductive objects (such as watches and jewelry). **Figure 8-2** shows conductive objects that must be removed before you touch a device.

Figure 8-2 Removing conductive objects

Figure 8-3 shows how to wear an ESD wrist strap.

a. Put your hands into the ESD wrist strap.
b. Tighten the strap buckle and ensure that the ESD wrist strap is in contact with your skin.
c. Insert the ground terminal attached to the ESD wrist strap into the jack on the grounded rack or chassis.

 Copyright © xFusion Digital Technologies Co., Ltd.

Figure 8-3 Wearing an ESD wrist strap

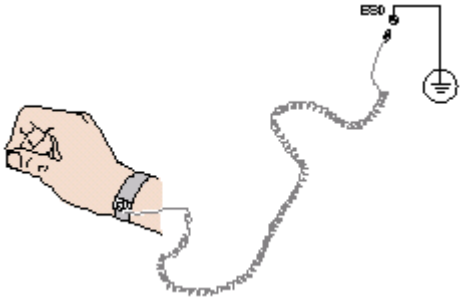

- Exercise caution when using tools.
- If the installation position of a device is higher than the shoulders of the installation personnel, use a vehicle such as a lift to facilitate installation. Prevent the device from falling down and causing personal injury or damage to the device.
- The equipment is powered by high-voltage power sources. Direct or indirect contact (especially through damp objects) with high-voltage power sources may result in serious injury or death.
- Ground the equipment before powering it on. Otherwise, personal injury may be caused by high electricity leakage.
- When a ladder is used, ensure that another person holds the ladder steady to prevent accidents.
- Do not look into optical ports without eye protection.

Device Security

- Use the recommended power cables at all times.
- Use power cables only for dedicated servers. Do not use them for other devices.
- Before operating equipment, wear ESD clothes and gloves to prevent electrostatic-sensitive devices from being damaged by ESD.
- When moving a device, hold the bottom of the device. Do not hold the handles of the installed modules, such as the PSUs, fan modules, drives, and the mainboard. Handle the equipment with care.
- Exercise caution when using tools.
- Connect the primary and secondary power cables to different power distribution units (PDUs) to ensure reliable system operation.
- Ground a device before powering it on. Otherwise, high leakage current may cause device damage.

Transportation Precautions

Improper transportation may damage equipment. Contact the manufacturer for precautions before attempting transportation.

Transportation precautions include but are not limited to:

- The logistics company engaged to transport the device must be reliable and comply with international standards for transporting electronics. Ensure that the equipment being transported is always kept upright. Take necessary precautions to prevent collisions, corrosion, package damage, damp conditions and pollution.

 Copyright © xFusion Digital Technologies Co., Ltd.

- Transport each device in its original packaging.
- If the original packaging is unavailable, package heavy, bulky parts (such as chassis and blades) and fragile parts (such as PCIe cards and optical modules) separately.

  NOTE

  For details about the components supported by the server, see "Compatibility" in the **Compatibility Checker**.
- Power off all devices before transportation.

Maximum Weight Carried by a Person

CAUTION

Comply with local regulations for the maximum load per person.

Table 8-1 lists the maximum weight one person is permitted to carry as stipulated by a number of organizations.

Table 8-1 Maximum weight carried per person

Organization	Weight (kg/lb)
European Committee for Standardization (CEN)	25/55.13
International Organization for Standardization (ISO)	25/55.13
National Institute for Occupational Safety and Health (NIOSH)	23/50.72
Health and Safety Executive (HSE)	25/55.13

For more information about safety instructions, see **Server Safety Information**.

8.2 Maintenance and Warranty

For details about the maintenance policy, visit **Customer Support Service**.

For details about the warranty policy, visit **Warranty**.

 Copyright © xFusion Digital Technologies Co., Ltd.

9 System Management

This product integrates the new-generation Intelligent Baseboard Management Controller (iBMC), which complies with Intelligent Platform Management Interface 2.0 (IPMI 2.0) specifications and provides reliable hardware monitoring and management.

The iBMC provides the following features:

- Various management interfaces

  The iBMC provides the following standard interfaces to meet various system integration requirements:
  - DCMI 1.5 interface
  - IPMI 1.5/IPMI 2.0 interface
  - CLI
  - Redfish interface
  - HTTPS
  - SNMP
- Fault detection and alarm management

  Faults can be detected and rectified in advance to ensure 24/7 stable running of the device.
  - The iBMC allows screenshots and videos to be created when the system breaks down, facilitating cause analysis of the system breakdown.
  - The iBMC offers screen snapshots and videos, simplifying routine preventive maintenance, recording, and auditing.
  - The FDM function supports component-based precise fault diagnosis, facilitating component fault locating and replacement.
  - The iBMC supports the reporting of alarms through syslog packets, trap packets, and emails, helping the upper-layer NMS to collect the fault information about the server.
- Security management
  - Software image backup improves system security. Even if the running software breaks down, the system can be started from the backup image.
  - Diversified user security control interfaces are provided to ensure user login security.

 Copyright © xFusion Digital Technologies Co., Ltd.

  - Multiple types of certificates can be imported and replaced to ensure data transmission security.
- System maintenance interface
  - The virtual KVM and virtual media functions facilitate remote maintenance.
  - The iBMC supports out-of-band RAID monitoring and configuration to improve RAID configuration efficiency and management capabilities.
  - Smart Provisioning provides a convenient operation interface for installing the OS, configuring RAID, and performing the upgrade without a CD-ROM.
- Various network protocols
  - The NTP synchronizes network time to optimize time configuration.
  - The iBMC supports domain name system (DNS) and Lightweight Directory Application Protocol (LDAP) to implement domain management and directory service.
- Intelligent power management
  - The power capping technology helps you easily improve deployment density.
  - The iBMC uses dynamic power saving to reduce operational expenditure (OPEX).
- License management

  By managing licenses, you can use the features of the iBMC advanced edition in authorization mode.

  Compared with the standard edition, the iBMC advanced edition provides more advanced features, such as:
  - Implements the OS deployment using Redfish.
  - Collect the original data of intelligent diagnosis using Redfish.

 Copyright © xFusion Digital Technologies Co., Ltd.

10 Certifications

Country/Region	Certification	Standards
Europe	WEEE	2012/19/EU
Europe	REACH	EC NO. 1907/2006
Europe	CE	Safety: EN 62368-1:2014+A11:2017 EMC: EN 55032:2015+A11:2020 CISPR 32:2015+A1:2019 EN IEC 61000-3-2:2019+A1:2021 EN 61000-3-3:2013+A1:2019 EN 55035:2017+A11:2020 CISPR 35:2016 EN 55024:2010+A1:2015 CISPR 24:2010+A1:2015 ETSI EN 300 386 V1.6.1:2012 ETSI EN 300 386 V2.1.1:2016 RoHS: EN IEC 63000:2018 ErP: Commission Regulation(EU) 424/2019

 Copyright © xFusion Digital Technologies Co., Ltd.

Country/Region	Certification	Standards
UK	UKCA	Safety: EN 62368-1:2014+A11:2017 EMC: EN 55032:2015+A11:2020 CISPR 32:2015+A1:2019 EN IEC 61000-3-2:2019+A1:2021 EN 61000-3-3:2013+A1:2019 EN 55035:2017+A11:2020 CISPR 35:2016 EN 55024:2010+A1:2015 CISPR 24:2010+A1:2015 ETSI EN 300 386 V1.6.1:2012 ETSI EN 300 386 V2.1.1:2016 RoHS: BS EN IEC 63000:2018 ErP: Commission Regulation(EU) 424/2019
China	CCC	GB 17625.1-2012 GB 4943.1-2011 GB/T 9254.1-2021 (Class A)
China	RoHS	SJ/T-11364 GB/T 26572
North America	NRTL	UL 62368-1:2014 CAN/CSA-C22.2 NO.62368-1-14
US	FCC	FCC PART 15
Canada	IC	ICES-003
Japan	VCCI	VCCI 32-1
Global	CB	IEC 62368-1:2014

 Copyright © xFusion Digital Technologies Co., Ltd.

11 Waste Product Recycling

If product users need product recycling service provided by xFusion after products are scrapped, contact technical support for services.

 Copyright © xFusion Digital Technologies Co., Ltd.

A Appendix

A.1 Node Label Information

NOTE

The label information and location are for reference only. For details, see the actual product.

A.1.1 Node Label

Figure A-1 Label position

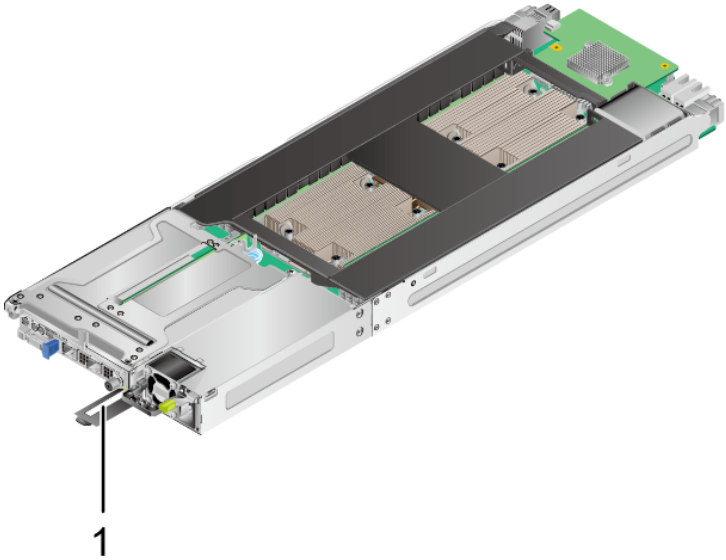

Table A-1 Label description

No.	Description
1	Serial number of the server node. For details, see **A.2 Product SN**.

 Copyright © xFusion Digital Technologies Co., Ltd.

A.2 Product SN

The serial number (SN) on the slide-out label plate uniquely identifies a device. The SN is required when you contact technical support. **Figure A-2** and **Figure A-3** show the SN formats.

- SN example 1

Figure A-2 SN example 1

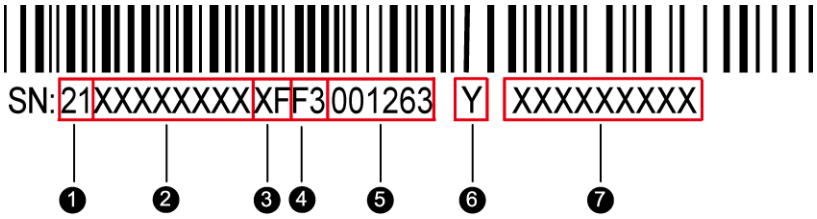

- SN example 2

Figure A-3 SN example 2

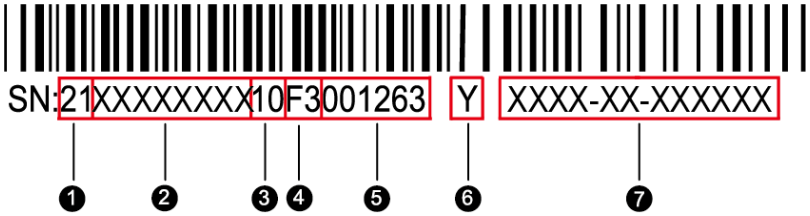

Table A-2 SN example description

No.	Description
1	ESN ID (two characters), which can only be **21**.
2	Material ID (eight characters), that is, the processing code.
3	Vendor code (two characters), that is, the code of the processing place.

 Copyright © xFusion Digital Technologies Co., Ltd.

No.	Description
4	Year and month (two characters). ● The first character indicates the year. – Digits 1 to 9 indicate years 2001 to 2009, respectively. – Letters A to H indicate years 2010 to 2017, respectively. – Letters J to N indicate years 2018 to 2022, respectively. – Letters P to Y indicate years 2023 to 2032, respectively. **NOTE** The years from 2010 are represented by upper-case letters excluding I, O, and Z because the three letters are similar to the digits 1, 0, and 2. ● The second character indicates the month. – Digits 1 to 9 indicate January to September, respectively. – Letters A to C indicate October to December, respectively.
5	Serial number (six digits).
6	RoHS compliance (one character). **Y** indicates RoHS compliant.
7	Internal model, that is, product name. The model format varies according to the actual situation.

A.3 Operating Temperature Limitations

Table A-3 Operating temperature limitations (server with 8 x 2.5" SAS/SATA drives)

Drive configuration	Number of Standard PCIe Cards	Number of OCP 3.0 Network Adapters	Number of RAID Controller Cards	Fan Configuration	CPU Configuration	Maximum Temperature
0 < drives ≤ 8	2	0	0	8080+	205 W < P ≤ 270 W	35°C
					P ≤ 205 W	35°C
	2	0	1	8080+	205 W < P ≤ 270 W	35°C
					P ≤ 205 W	35°C
	2	1	1	8080+	205 W < P ≤ 270 W	32°C
					P ≤ 205 W	35°C

 Copyright © xFusion Digital Technologies Co., Ltd.

Drive configuration	Number of Standard PCIe Cards	Number of OCP 3.0 Network Adapters	Number of RAID Controller Cards	Fan Configuration	CPU Configuration	Maximum Temperature
	1	1	0	8080+	120 W < P ≤ 150 W	45°C
	1	1	1	8080+	P ≤ 120 W	45°C
0 < drives ≤ 8	2	0	0	8080	205 W < P ≤ 270 W	32°C
					P ≤ 205 W	35°C
	2	0	1	8080	205 W < P ≤ 270 W	30°C
					P ≤ 205 W	35°C
	2	1	1	8080	205 W < P ≤ 270 W	29°C
					P ≤ 205 W	35°C

- By default, all configurations include optical modules.
- XH321 V6 does not support the 8368Q processor.
- When the server is configured with high-frequency, less-core processors such as 6346 and 6354, the supported operating temperature decreases. For details, consult the local sales representatives.
- For configurations not listed in the table, the operating temperature range is 5°C (41°F) to 35°C (95°F). For special configuration and temperature requirements, contact technical support.

Table A-4 Operating temperature limitations (server with 24 x 2.5" SAS/SATA drives)

Drive configuration	Number of Standard PCIe Cards	Number of OCP 3.0 Network Adapters	Number of RAID Controller Cards	Fan Configuration	CPU Configuration	Maximum Temperature
16 ≤ drives ≤ 24	2	0	0	8080+	185 W < P ≤ 205 W	35°C
					P ≤ 185 W	35°C

 Copyright © xFusion Digital Technologies Co., Ltd.

Drive configuration	Number of Standard PCIe Cards	Number of OCP 3.0 Network Adapters	Number of RAID Controller Cards	Fan Configuration	CPU Configuration	Maximum Temperature
	2	0	1	8080+	185 W < P ≤ 205 W	35°C
					P ≤ 185 W	35°C
	2	1	1	8080+	185 W < P ≤ 205 W	35°C
					P ≤ 185 W	35°C
	2	0	0	8080	185 W < P ≤ 205 W	35°C
					P ≤ 185 W	35°C
	2	0	1	8080	185 W < P ≤ 205 W	33°C
					P ≤ 185 W	35°C
	2	1	1	8080	185 W < P ≤ 205 W	32°C
					P ≤ 185 W	35°C

- By default, all configurations include optical modules.
- When the server is configured with high-frequency, less-core processors such as 6346 and 6354, the supported operating temperature decreases. For details, consult the local sales representatives.
- For configurations not listed in the table, the operating temperature range is 5°C (41°F) to 35°C (95°F). For special configuration and temperature requirements, contact technical support.

 Copyright © xFusion Digital Technologies Co., Ltd.

Table A-5 Operating temperature limitations (server with 24 x 2.5" SAS/SATA/NVMe drives)

Drive configuration	Number of Standard PCIe Cards	Number of OCP 3.0 Network Adapters	Number of RAID Controller Cards	Fan Configuration	CPU Configuration	Maximum Temperature
16 ≤ drives ≤ 24	2	0	0[a]	8080+	185 W < P ≤ 205 W	35°C
					P ≤ 185 W	35°C
	2	1	0[a]	8080+	185 W < P ≤ 205 W	34°C
					P ≤ 185 W	35°C
	2	0	0[a]	8080	185 W < P ≤ 205 W	32°C
					P ≤ 185 W	35°C
	2	1	0[a]	8080	185 W < P ≤ 205 W	31°C
					P ≤ 185 W	35°C

- a: When NVMe drives are used, and the RAID controller card is configured for SAS/SATA drives, the supported operating temperature may decrease.
- By default, all configurations include optical modules.
- When the server is configured with high-frequency, less-core processors such as 6346 and 6354, the supported operating temperature decreases. For details, consult the local sales representatives.
- For configurations not listed in the table, the operating temperature range is 5°C (41°F) to 35°C (95°F). For special configuration and temperature requirements, contact technical support.

A.4 RAS Features

The server supports a variety of Reliability, Availability, and Serviceability (RAS) features. You can configure these features for better performance.

For details about the RAS features, see *FusionServer Ice Lake Platform RAS Technical White Paper*.

 Copyright © xFusion Digital Technologies Co., Ltd.

A.5 Sensor List

Sensor	Description	Component
Inlet Temp	Chassis air inlet temperature	Left mounting ear
Outlet Temp	Air outlet temperature	Mainboard
RAID BBU Temp	RAID controller card capacitor temperature	RAID controller card
RAID Card BBU	BBU of the screw-in RAID controller card	RAID controller card
PCH Temp	PCH bridge temperature	Component in position U55 on the mainboard
CPU*N* Core Rem	CPU core temperature	Mainboard *N* indicates the CPU number. The value is **1** or **2**.
CPU*N* DTS	Difference between the real-time CPU temperature and the core CPU temperature threshold	CPU*N* *N* indicates the CPU number. The value is **1** or **2**.
CPU*N* Margin	Difference between the real-time CPU temperature and the CPU Tcontrol threshold	CPU*N* *N* indicates the CPU number. The value is **1** or **2**.
CPU*N* Prochot	CPU Prochot	CPU*N* *N* indicates the CPU number. The value is **1** or **2**.
CPU*N* VDDQ Temp	CPU VDDQ temperature	CPU*N* *N* indicates the CPU number. The value is **1** or **2**.
CPU*N* VRDTemp	CPU VRD temperature	CPU*N* *N* indicates the CPU number. The value is **1** or **2**.
CPU*N* MEM Temp	CPU DIMM temperature	CPU*N* *N* indicates the CPU number. The value is **1** or **2**.
CPU*N* VSA	CPU VSA voltage	CPU*N* *N* indicates the CPU number. The value is **1** or **2**.

 Copyright © xFusion Digital Technologies Co., Ltd.

Sensor	Description	Component
CPU*N* VCCIO	CPU VCCIO voltage	CPU*N* *N* indicates the CPU number. The value is **1** or **2**.
SYS_1V05_PCH	PCH PRIM voltage	Component in position U10 on the mainboard
SYS_12V_MB1	Mainboard 12.0 V voltage	Component in position U12409 on the mainboard
SYS_12V_MB2		Component in position U12408 on the mainboard
SYS_12V_VSBY		Component in position U44 on the mainboard
SYS_3V3	Mainboard 3.3 V voltage	Component in position U1004 on the mainboard
SYS_5V_STBY	Mainboard 5.0 V voltage	Component in position U72 on the mainboard
SYS_5V_RESV		Component in position U106 on the mainboard
SYS_VPP_ABCD	Mainboard CP1 VPP voltage	Component in position U101 on the mainboard
SYS_VPP_EFGH		Component in position U102 on the mainboard
SYS_1V8_CPU*N*	Mainboard CPU1 1.8 V voltage	CPU1: Component in position U2 on the mainboard. CPU2: Component in position U39 on the mainboard. *N* indicates the CPU number. The value is **1** or **2**.
SYS_3V3_RESV	Mainboard 3 V voltage	Component in position U54 on the mainboard
CPU*N* VCore	1.8 V CPU voltage	CPU1: Component in position U2 on the mainboard. CPU2: Component in position U39 on the mainboard. *N* indicates the CPU number. The value is **1** or **2**.
CPU*N* DDR VDDQ	1.2 V DIMM voltage	Mainboard *N* indicates the CPU number. The value is **1** or **2**.
CPU*N* DDR VDDQ2		

 Copyright © xFusion Digital Technologies Co., Ltd.

Sensor	Description	Component
RAID Temp	Temperature of the RAID controller card	RAID controller card
Disks Temp	Maximum drive temperature	Drive
Power	Board power	Mainboard
FAN*N* F Speed	Fan speed	Fan module *N* *N* indicates the fan module number. The value ranges from **1** to **4**.
FAN*N* R Speed		
Power*N*	PSU input power	PSU *N* *N* indicates the PSU number. The value is **1** or **4**.
CPU Usage	CPU usage.	Mainboard
Memory Usage	Memory usage.	Mainboard
CPU*N* Status	CPU status	CPU*N* *N* indicates the CPU number. The value is **1** or **2**.
CPU*N* Memory	DIMM status	Memory module corresponding to CPU *N* *N* indicates the CPU number. The value is **1** or **2**.
PwrOk Sig. Drop	Voltage dip status	Mainboard
PS*N* Status	PSU status	PSU *N* *N* indicates the PSU number. The value is **1** or **4**.
PS*N* Fan Status	PSU fan fault status	PSU *N* *N* indicates the PSU number. The value is **1** or **4**.
PS*N* VIN	Input voltage	PSU *N* *N* indicates the PSU number. The value is **1** or **4**.
PS*N* Inlet Temp	PSU air inlet temperature	PSU *N* *N* indicates the PSU number. The value is **1** or **4**.
ACPI State	ACPI status	ACPI status
SysFWProgress	Software process and system startup errors	N/A
Power Button	Power button status	Mainboard and power button

 Copyright © xFusion Digital Technologies Co., Ltd.

Sensor	Description	Component
SysRestart	Cause of system restart	Mainboard
Boot Error	Boot error	Mainboard
Watchdog2	Watchdog	Mainboard
Mngmnt Health	Management subsystem health status	Management module
DISK*N*	Disk status	Drive*N* *N* indicates the drive slot number. The value ranges from **0** to **5**.
FAN*N* Presence	Fan presence	Fan module *N* *N* indicates the fan module number. The value ranges from **1** to **4**.
FAN*N* Status	Fan fault status	Fan module *N* *N* indicates the fan module number. The value ranges from **1** to **4**.
UID Button	UID button status	Mainboard
RTC Battery	RTC battery status. An alarm is generated when the voltage is lower than 1 V.	RTC battery on the mainboard
RAID Status	RAID controller card health status	RAID controller card
DIMM*N*	DIMM status	DIMM *N* *N* indicates the DIMM slot number.
PCIe Status	PCIe status error	PCIe device
PwrOn TimeOut	Power-on timeout	Mainboard
PwrCap Status	Power capping status	Mainboard
RAID PCIe ERR	Health status of the RAID controller card in fault diagnosis	RAID controller card
PS Redundancy	Redundancy failure due to PSU removal	Power supply unit (PSU)
BMC Boot Up	BMC startup events	Component in position U21 on the mainboard
SEL Status	SEL full or clearing events	N/A

 Copyright © xFusion Digital Technologies Co., Ltd.

Sensor	Description	Component
System Notice	Hot restart reminder and fault diagnosis program information collection	N/A
System Error	System suspension or restart. Check the background logs.	N/A
PCH Status	PCH chip fault diagnosis health status	Component in position U55 on the mainboard
CPU*N* UPI Link	CPU UPI link fault diagnosis health status	CPU*N* *N* indicates the CPU number. The value is **1** or **2**.
Op. Log Full	Operation log full or clearing events	N/A
Sec. Log Full	Security log full or clearing events	N/A
SSD Disk*N* Temp	SSD temperature	SSD drive *N* *N* indicates the drive slot number. The value ranges from **0** to **5**.
BMC Time Hopping	Time hopping	N/A
NTP Sync Failed	NTP synchronization failure and recovery events	N/A
Host Loss	System monitoring software (BMA) link loss detection	N/A
IB$ Temp	IB NIC temperature	IB card *N* *N* indicates the IB card number. The value is **1** or **2**.
GPU$ Temp	GPU temperature	GPU cards
PCIe$ OP Temp	PCIe card optical module temperature	PCIe card
PCIe$ NIC Temp	PCIe card chip temperature	PCIe card
OCP1 Temp	OCP card chip temperature	OCP card
1711 Core Temp	Core temperature of the BMC management chip	Component in position U21 on the mainboard
Disks Temp	Maximum HDD temperature (reported by BMA)	HDD
SSD MaxTemp	Maximum SSD temperature (reported by BMA)	SSD

 Copyright © xFusion Digital Technologies Co., Ltd.

Sensor	Description	Component
CPU*N* VCCIN	CPU*N* VCCIN voltage	Mainboard *N* indicates the CPU number. The value is **1** or **2**.
CPU*N* P1V8	CPU*N* P1V8 voltage	Mainboard *N* indicates the CPU number. The value is **1** or **2**.
CPU*N* VCCANA	CPU*N* VCCANA voltage	Mainboard *N* indicates the CPU number. The value is **1** or **2**.
IO Temp	I/O card temperature	I/O card

 Copyright © xFusion Digital Technologies Co., Ltd.

B Glossary

B.1 A-E

B

BMC	The baseboard management controller (BMC) complies with the Intelligent Platform Management Interface (IPMI). It collects, processes, and stores sensor signals, and monitors the operating status of components. The BMC provides the hardware status and alarm information about the managed objects to the upper-level management system, so that the management system can manage the objects.

E

ejector lever	A part on the panel of a device used to facilitate installation or removal of the device.
Ethernet	A baseband local area network (LAN) architecture developed by Xerox Corporation by partnering with Intel and DEC. Ethernet uses the Carrier Sense Multiple Access/Collision Detection (CSMA/CD) access method and allows data transfer over various cables at 10 Mbit/s. The Ethernet specification is the basis for the IEEE 802.3 standard.

 Copyright © xFusion Digital Technologies Co., Ltd.

B.2 F-J

G

Gigabit Ethernet (GE)	An extension and enhancement of traditional shared media Ethernet standards. It is compatible with 10 Mbit/s and 100 Mbit/s Ethernet and complies with IEEE 802.3z standards.

H

hot swap	Replacing or adding components without stopping or shutting down the system.

B.3 K-O

K

KVM	A hardware device that provides public video, keyboard and mouse (KVM).

B.4 P-T

P

panel	An external component (including but not limited to ejector levers, indicators, and ports) on the front or rear of the server. It seals the front and rear of the chassis to ensure optimal ventilation and electromagnetic compatibility (EMC).
Peripheral Component Interconnect Express (PCIe)	A computer bus PCI, which uses the existing PCI programming concepts and communication standards, but builds a faster serial communication system. Intel is the main sponsor for PCIe. PCIe is used only for internal interconnection. A PCI system can be transformed to a PCIe system by modifying the physical layer instead of software. PCIe delivers a faster speed and can replace almost all AGP and PCI buses.

 Copyright © xFusion Digital Technologies Co., Ltd.

R

redundancy	A mechanism that allows a backup device to automatically take over services from a faulty device to ensure uninterrupted running of the system.
redundant array of independent disks (RAID)	A storage technology that combines multiple physical drives into a logical unit for the purposes of data redundancy and performance improvement.

S

server	A special computer that provides services for clients over a network.
system event log (SEL)	Event records stored in the system used for subsequent fault diagnosis and system recovery.

B.5 U-Z

U

U	A unit defined in International Electrotechnical Commission (IEC) 60297-1 to measure the height of a cabinet, chassis, or subrack. 1 U = 44.45 mm
UltraPath Interconnect (UPI)	A point-to-point processor interconnect developed by Intel.

 Copyright © xFusion Digital Technologies Co., Ltd.

C Acronyms and Abbreviations

C.1 A-E

A

AC	alternating current
AES	Advanced Encryption Standard New Instruction Set
ARP	Address Resolution Protocol
AVX	Advanced Vector Extensions

B

BBU	backup battery unit
BIOS	Basic Input/Output System
BMC	baseboard management controller

C

CCC	China Compulsory Certification
CD	calendar day
CE	Conformite Europeenne
CIM	Common Information Model
CLI	command-line interface

 Copyright © xFusion Digital Technologies Co., Ltd.

D

DC	direct current
DDR4	Double Data Rate 4
DDDC	double device data correction
DEMT	Dynamic Energy Management Technology
DIMM	dual in-line memory module
DRAM	dynamic random-access memory
DVD	digital video disc

E

ECC	error checking and correcting
ECMA	European Computer Manufacturer Association
EDB	Execute Disable Bit
EID	Enclosure ID
EN	European Efficiency
ERP	enterprise resource planning
ETS	European Telecommunication Standards

C.2 F-J

F

FB-DIMM	Fully Buffered DIMM
FC	Fiber Channel
FCC	Federal Communications Commission
FCoE	Fibre Channel over Ethernet
FTP	File Transfer Protocol

G

GE	Gigabit Ethernet

 Copyright © xFusion Digital Technologies Co., Ltd.

GPIO	General Purpose Input/Output
GPU	graphics processing unit

H

HA	high availability
HDD	hard disk drive
HPC	high-performance computing
HTTP	Hypertext Transfer Protocol
HTTPS	Hypertext Transfer Protocol Secure

I

iBMC	intelligent baseboard management controller
IC	Industry Canada
ICMP	Internet Control Message Protocol
IDC	Internet Data Center
IEC	International Electrotechnical Commission
IEEE	Institute of Electrical and Electronics Engineers
IGMP	Internet Group Message Protocol
IOPS	input/output operations per second
IP	Internet Protocol
IPC	Intelligent Power Capability
IPMB	Intelligent Platform Management Bus
IPMI	Intelligent Platform Management Interface

C.3 K-O

K

KVM	keyboard, video, and mouse

 Copyright © xFusion Digital Technologies Co., Ltd.

L

LC	Lucent Connector
LRDIMM	load-reduced dual in-line memory module
LED	light emitting diode
LOM	LAN on motherboard

M

MAC	media access control
MMC	module management controller

N

NBD	next business day
NC-SI	Network Controller Sideband Interface

O

OCP	Open Compute Project

C.4 P-T

P

PCIe	Peripheral Component Interconnect Express
PDU	power distribution unit
PHY	physical layer
PMBUS	power management bus
POK	Power OK
PWM	pulse-width modulation
PXE	Preboot Execution Environment

 Copyright © xFusion Digital Technologies Co., Ltd.

R

RAID	redundant array of independent disks
RAS	reliability, availability and serviceability
RDIMM	registered dual in-line memory module
REACH	Registration Evaluation and Authorization of Chemicals
RJ45	registered jack 45
RoHS	Restriction of the Use of Certain Hazardous Substances in Electrical and Electronic Equipment

S

SAS	Serial Attached Small Computer System Interface
SATA	Serial Advanced Technology Attachment
SCM	supply chain management
SDDC	single device data correction
SERDES	serializer/deserializer
SGMII	serial gigabit media independent interface
SMI	serial management interface
SMTP	Simple Mail Transfer Protocol
SNMP	Simple Network Management Protocol
SOL	serial over LAN
SONCAP	Standards Organization of Nigeria-Conformity Assessment Program
SSD	solid-state drive
SSE	Streaming SIMD Extension

T

TACH	tachometer signal
TBT	Turbo Boost Technology
TCG	Trusted Computing Group
TCM	trusted cryptography module
TCO	total cost of ownership

 Copyright © xFusion Digital Technologies Co., Ltd.

TDP	thermal design power
TELNET	Telecommunication Network Protocol
TET	Trusted Execution Technology
TFM	TransFlash module
TFTP	Trivial File Transfer Protocol
TOE	TCP offload engine
TPM	trusted platform module

C.5 U-Z

U

UDIMM	unbuffered dual in-line memory module
UEFI	Unified Extensible Firmware Interface
UID	unit identification light
UL	Underwriter Laboratories Inc.
UPI	UltraPath Interconnect
USB	Universal Serial Bus

V

VCCI	Voluntary Control Council for Interference by Information Technology Equipment
VGA	Video Graphics Array
VLAN	virtual local area network
VRD	voltage regulator-down

W

WEEE	waste electrical and electronic equipment
WSMAN	Web Service Management

 Copyright © xFusion Digital Technologies Co., Ltd.