FusionPoD 700 Rack-Scale Server

Technical White Paper

Issue	**01**
Date	**2022-02-07**

xFusion Digital Technologies Co., Ltd.

Copyrights © xFusion Digital Technologies Co., Ltd. 2022. All rights reserved.

No part of this document may be reproduced or transmitted in any form or by any means without prior written consent of xFusion Digital Technologies Co., Ltd.

Trademarks and Permissions

xFUSION and other xFusion trademarks are trademarks of xFusion Digital Technologies Co., Ltd.

All other trademarks and trade names mentioned in this document are the property of their respective holders.

Notice

In this document, "xFusion" is used to refer to "xFusion Digital Technologies Co., Ltd." for concise description and easy understanding, which does not mean that "xFusion" may have any other meaning. Any "xFusion" mentioned or described hereof may not be understood as any meaning other than "xFusion Digital Technologies Co., Ltd.", and xFusion Digital Technology Co., Ltd. shall not bear any liability resulting from the use of "xFusion".

The purchased products, services and features are stipulated by the contract made between xFusion and the customer. All or part of the products, services and features described in this document may not be within the purchase scope or the usage scope. Unless otherwise specified in the contract, all statements, information, and recommendations in this document are provided "AS IS" without warranties, guarantees or representations of any kind, either express or implied.

The information in this document is subject to change without notice. Every effort has been made in the preparation of this document to ensure accuracy of the contents, but all statements, information, and recommendations in this document do not constitute a warranty of any kind, express or implied.

xFusion Digital Technologies Co., Ltd.

Address: 9th Floor, Building 1, Zensun Boya Square, Longzihu Wisdom Island
Zhengdong New District 450046
Zhengzhou, Henan Province
People's Republic of China

Website: https://www.xfusion.com

Contents

About This Document v

1 Overview 7

1.1 Product Overview 7

1.2 Product Features 8

2 System Architechture 10

2.1 Three-Bus Architecture 10

2.2 Heat Dissipation System 11

2.3 Power Supply System 13

2.4 Management System 16

2.5 Networking Solution 17

3 Hardware Description 19

3.1 Cabinet 20

3.2 Management Module 21

3.2.1 RM210 21

3.3 Server Node 22

3.3.1 DH141C V5 22

3.4 Switching Node 23

3.4.1 Out-of Band Management Switching Node 23

3.4.2 Service Switching Node 23

3.5 Network Interface Card (NIC) 24

3.5.1 Ethernet NICs 24

3.6 Power Supply 25

3.6.1 Power Shelf 25

3.6.2 PSU 27

3.6.3 PDU 29

3.7 Leakage Detection Modules 32

3.7.1 Photoelectric Leakage Sensor 32

3.7.2 Liquid Leakage Detection on the Secondary Loop 33

4 Specifications 34

4.1 Technical Specifications 34

4.2 Environmental Specifications 35

4.3 Physical Specifications 36

5 Software and Hardware Compatibility 38

6 Safety Instructions 39

6.1 Security 39

6.2 Maintenance and Warranty 42

A Appendix 43

B Glossary 44

C Acronyms and Abbreviations 46

About This Document

Purpose

This document describes the appearance, functions and structure of a FusionPoD 700 cabinet server.

Intended Audience

This document is intended for pre-sales engineers.

Symbol Conventions

The symbols that may be found in this document are defined as follows.

Symbol	Description
DANGER	Indicates a hazard with a high level of risk which, if not avoided, will result in death or serious injury.
WARNING	Indicates a hazard with a medium level of risk that, if not avoided, could result in death or serious injury.
CAUTION	Indicates a hazard with a low level of risk which, if not avoided, could result in minor or moderate injury.
NOTICE	Indicates a potentially hazardous situation which, if not avoided, could result in equipment damage, data loss, performance deterioration, or unanticipated results. NOTICE is used to address practices not related to personal injury.
NOTE	Supplements the important information in the main text. NOTE is used to address information not related to personal injury, equipment damage, and environment deterioration.

Change History

Issue	Release Date	Change Description
01	2022-02-07	This issue is the first official release.

1 Overview

1.1 Product Overview

1.2 Product Features

1.1 Product Overview

FusionPoD 700 rack-scale server (nameplate FP700, hereinafter referred to as FusionPoD 700) is a computing cluster server cabinet, which features high density, high performance, high energy efficiency, high reliability, all-in-one delivery, simplified Operation and Maintenance (O&M), and lower Total Cost of Ownership (TCO). FusionPoD 700 is applicable to private cloud customer data centers such as operators, finance, government and enterprises.

Figure 1-1 Overview of the FusionPoD 700 liquid cooling cabinet

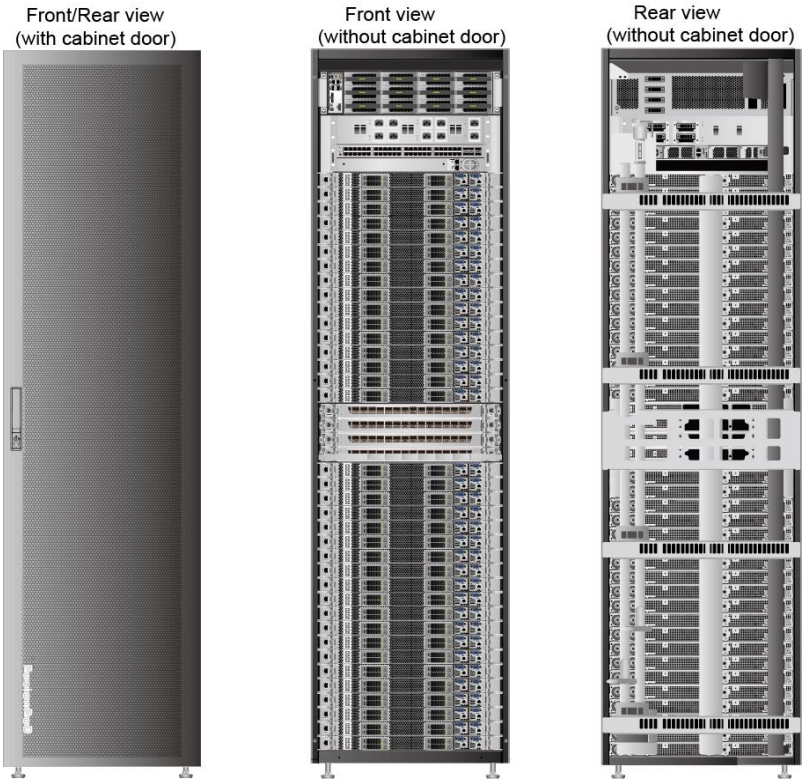

1.2 Product Features

High Density

- 36 1 U liquid cooling server nodes (DH141C V5), with each supporting two server mainboards.

NOTE

- The number of configurable server nodes depends on the actual power consumption. The same cabinet only supports server node configurations of the same model.
- For details of supported server nodes, see 3.3 Server Node.
- The cabinet comes with guide rails, and the server nodes are installed directly on the guide rails.

High Performance

- Liquid cooling, allowing server nodes to run at a higher frequency and providing powerful computing capabilities.
- 4 service switching nodes, 1 out-of-band management switching node, and 1+1 redundancy of service switching nodes.

High Energy Efficiency

- Mains direct supply.
- 48 V centralized power supply, up to 97% high power efficiency.

- Liquid cooling for server nodes, supporting up to 45ºC (113°F) water.
- Power Usage Effectiveness (PUE) low as 1.2 (without RDHx).

High Reliability

- 2N power distribution.
- PSUs in 11+1 configuration, and a maximum power supply capacity of 33 kW.
- N+1 fan modules for server nodes. The maximum operating temperature supported in case of single fan and single rotor failure is 5ºC (41ºF) below the normal operating temperature.
- The cable backplane has no active components, and the failure rate is 90% lower than that of the traditional backplane.
- The leakage prevention design of server nodes and cabinets supports cabinet and node liquid leakage monitoring, and can realize self-isolation of the leakage.
- The life span of the cabinet components is more than 10 years.

All-in-One Delivery

- Transportation of the entire cabinet (including the cabinet, server nodes, switching nodes, management modules, power shelves, PDUs, PSUs, and sensors) supported, except the cabinet doors and its accessories.

Simplified O&M

- Server node three-bus blind-mating.
- Server U space identification with simplified O&M.
- Redfish APIs for integration with third-party NMSs.
- FusionDirector intelligent management features.

2 System Architechture

2.1 Three-Bus Architecture
2.2 Heat Dissipation System
2.3 Power Supply System
2.4 Management System
2.5 Networking Solution

2.1 Three-Bus Architecture

The FusionPoD server node supports three-bus blind-mating. The three buses in the cabinet are described as follows.

- Liquid cooling bus: Manifold water supply and return pipes are respectively connected with the secondary loop of the equipment room and the server nodes for liquid cooling cycle.
- Backplane bus: Cable signal backplane for signal interconnecting between server nodes and switching nodes.
- Power supply bus: Busbar provides 48 V DC power supply for server nodes.

Figure 2-1 Three buses of the cabinet

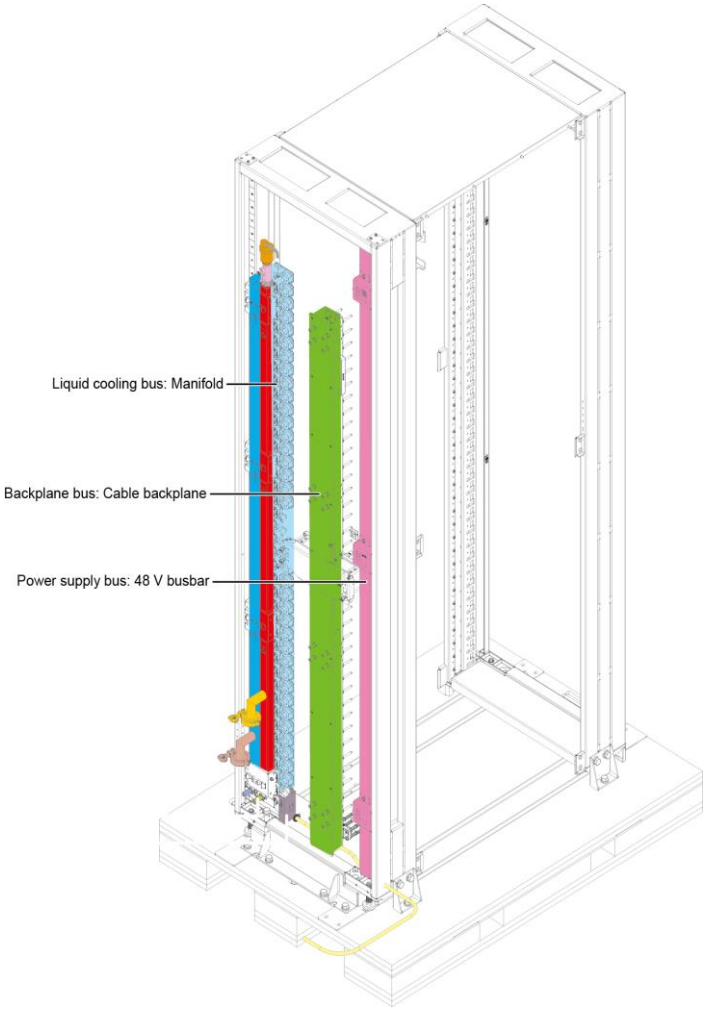

2.2 Heat Dissipation System

Heat Dissipation System of the Equipment Room

FusionPoD 700 is applicable to equipment rooms in various scenarios and liquid-cooled equipment rooms. The FusionPoD 700 rack-scale server liquid cooling solution of the data center is shown in Figure 2-2. The CDU drives liquid circulation. Warm water output from the CDU exchanges heat with the liquid cooling plate of the server node. Heat generated by high-power components such as CPUs and DIMMs is dissipated by the liquid cooling plate. The other excessive heat is removed by the in-row air conditioner. Heat dissipation system of the equipment room consists of the primary side and the secondary side.

- The primary side consists of a cooling tower, water pumps, a chiller, and a primary loop.
- The secondary side consists of a CDU, a secondary loop, and liquid cooling cabinets.

Figure 2-2 Heat dissipation system of the equipment room

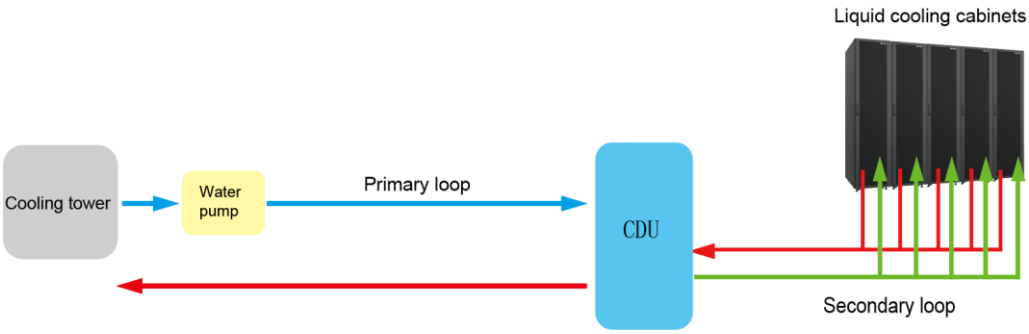

Table 2-1 Description of components in the heat dissipation system

Name	Description
Cooling tower	• Dissipates the heat from the liquid loops to the exterior. Generally, it is placed outdoors. The water outlet temperature varies depending on the local temperature. The water outlet temperature ranges from 5°C to 35°C (41°F to 95°F). • A closed cooling tower is recommended.
Water pump	Drives the liquid circulation or increases the liquid pressure.
CDU	• Implements flow distribution, pressure control, physical isolation, and condensation prevention for the secondary side. The CDU implements heat dissipation of the components that use direct contact liquid cooling (DCLC) in the cabinet. The heat of high-power CPUs is removed by the liquid cooling plates. • The CDU is installed outside the full liquid cooling cabinet, and the secondary loop is required.
Liquid cooling cabinets	Provides liquid cooling for the devices in the cabinet. Heat is removed from the cabinet by water.
Primary side	Blue arrows indicate the inlet water, and red arrows indicate the outlet water. The primary side performs the following two actions: • Circulating water between the cooling tower and the CDU. • Circulating water between the cooling tower and the RDHx through the chiller. **NOTE** Special scenarios refer to the scenarios with restrictions on device configurations and environment specifications. For details, contact technical support engineers.
Secondary side	Circulates water between the CDU and the liquid cooling cabinet. Green arrows indicate the inlet water, and red arrows indicate the outlet water.

Heat Dissipation System of the Cabinet

In the cabinet heat dissipation system, high-power components such as processors on servers and DIMMs are cooled by liquid cooling modules, as shown in Figure 2-3.

Figure 2-3 Heat dissipation system of the cabinet

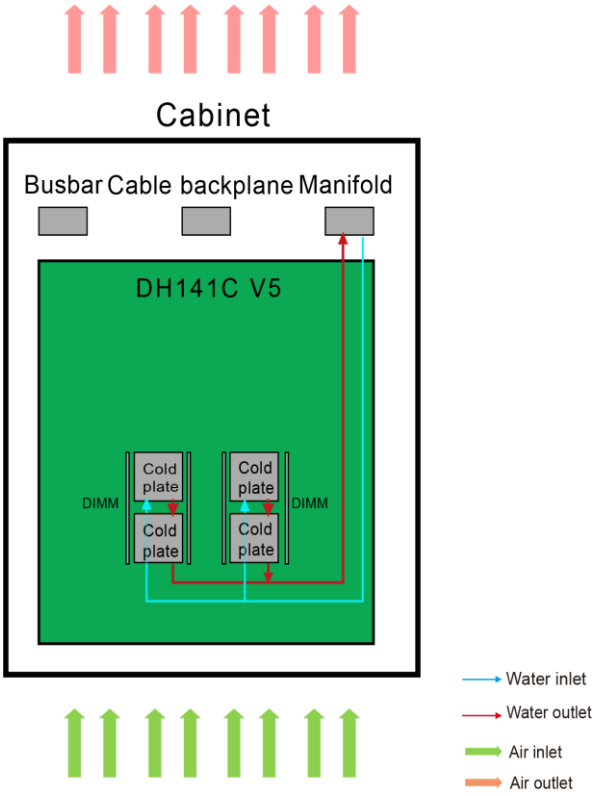

2.3 Power Supply System

Power Supply System of the Equipment Room

FusionPoD 700 rack-scale servers support the 2N power supply system.

Let's take the utility power input of the equipment room as an example. 2N power supply system refers to a redundant system composed of two or more sets of power supply systems. The power supply system of each data center equipment room includes N sets of power supply systems (called N active), and its total capacity is the basic capacity of the power supply system of the equipment room. All links and devices in the whole path of the power supply system (from the power supply input to the dual power supply input load) are redundancy configured (called N backup), and they are two power supply lines isolated from each other. During normal operation, each power supply system only bears part of the total load. The 2N power supply system is shown in Figure 2-4.

Figure 2-4 2N power supply system

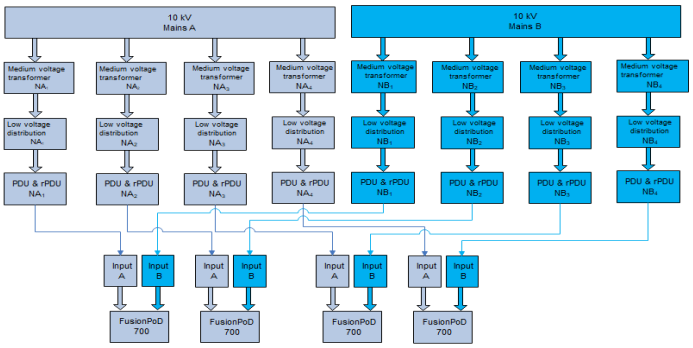

Power Supply System of the Cabinet

FusionPoD 700 rack-scale servers support the 2N power supply system.

FusionPoD 700 rack-scale servers realize joint power supply to the whole cabinet through the active circuit (N active) and backup circuit (N backup) of the equipment room for active switching of power supply scenario (such as maintenance and repair) and passive switching of power supply scenario (such as abnormal power supply at the front level of the equipment room). The switching mode of power supply is shown in Table 2-2 and Table 2-3. The load rate of N active or N backup being 100% indicates the power supply source of the current cabinet. When the load rate of N active and N backup is 0%, all loads of the entire cabinet are powered off. When the active circuit (N active) and the backup circuit (N backup) are powered off at the same time, all devices in the cabinet are shut down.

Table 2-2 Active switching of the power supply scenario

Input Status	Active Circuit (N Active) Load Rate	Backup Circuit (N Backup) Load Rate
Active circuit (N active) and the backup circuit (N backup) are normal.	100%	0%
Active circuit (N active) is powered off, and the backup circuit (N backup) is normal.	0%	100%
Active circuit (N active) is powered on, and the backup circuit (N backup) is normal.	100%	0%
Active circuit (N active) is normal, and the backup circuit (N backup) is powered off/on.	100%	0%

Input Status	Active Circuit (N Active) Load Rate	Backup Circuit (N Backup) Load Rate
Active circuit (N active) and the backup circuit (N backup) are powered off.	0%	0%
Only the backup circuit (N backup) is powered on.	0%	100%
Active circuit (N active) is powered on, and the backup circuit (N backup) is normal.	100%	0%

Table 2-3 Passive switching of the power supply scenario

Input Status	Active Circuit (N Active) Load Rate	Backup Circuit (N Backup) Load Rate
Active circuit (N active) and the backup circuit (N backup) are normal.	100%	0%
Active circuit (N active) is normal, and the backup circuit (N backup) is powered off/on.	100%	0%
Active circuit (N active) is powered off, and the backup circuit (N backup) is normal.	0%	0%

The power shelf is in a 3 U form, and installed at the top of the cabinet. 12 PSUs are installed in 12 power slots, with a maximum of 11+1 redundancy. The management module is installed in the power shelf, and shares the chassis with PSUs. The power shelf supports dual AC input and 48 V DC output, and powers server nodes and management modules through the Busbar.

The cabinet is configured with a PDU to power the switching nodes. The PDU is installed under the power shelf. It provides 380 V AC (1+1) input and output for the power shelf, and 220 V AC (5+5) for the switching nodes.

When the utility power supply is normal, the 48 V DC power supply powers server nodes through the Busbar. When the utility power is off, all the devices in the cabinet are shut down.

Figure 2-5 Power supply system architecture

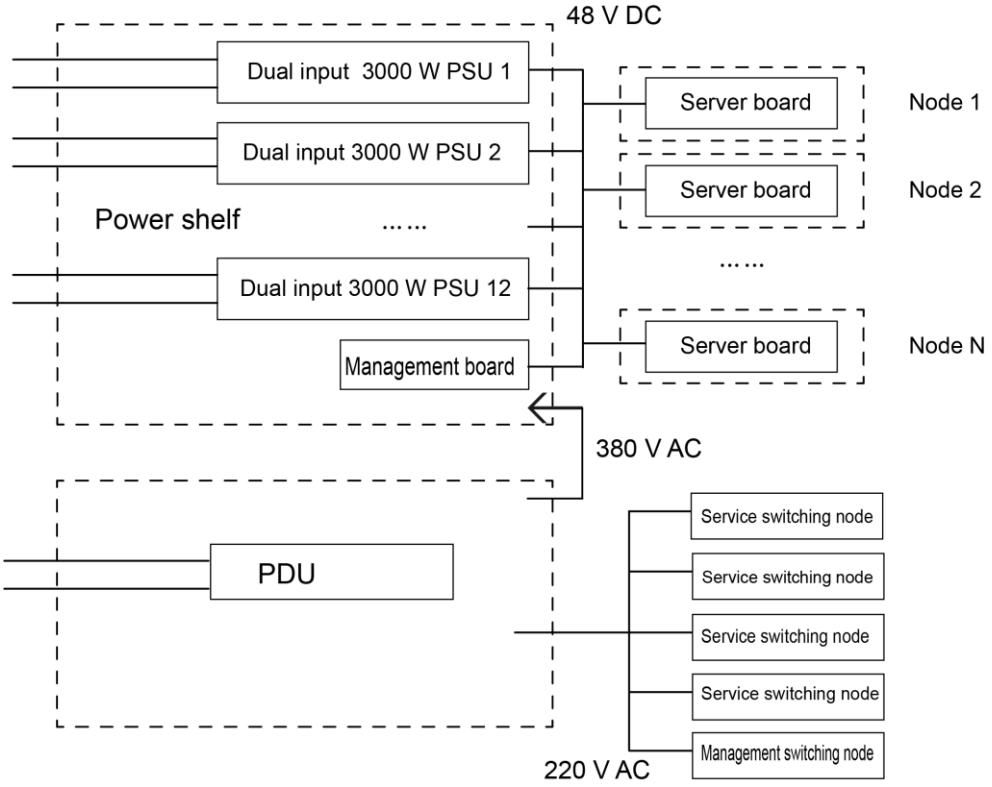

2.4 Management System

The FusionPoD 700 management system includes the management systems for server node BMC, cabinet, and switching node.

Figure 2-6 Management system architecture

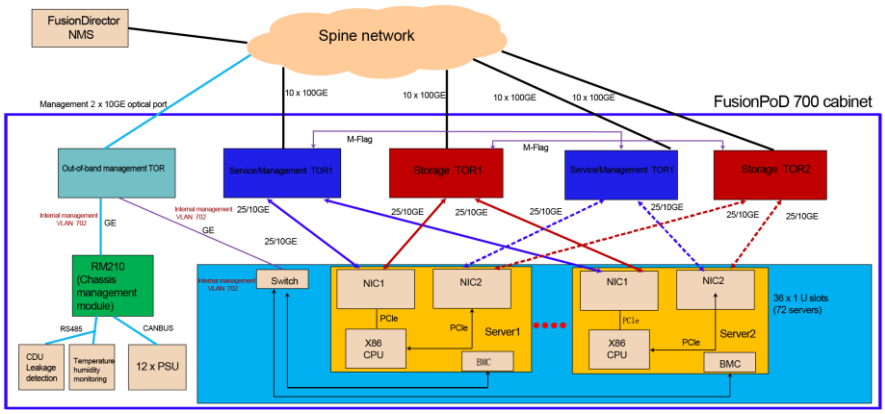

Server Node BMC Management System

The BMC GE port on the server node panel converges to the out-of band management switching node through network cables in the cabinet. The out-of band management switching node is connected to the FusionDirector of the data center management plane through the uplink interface, and is connected to the cabinet management module RM210 through the switching node.

Cabinet Management System

The cabinet management module RM210 is connected to the PSU through the CAN bus and goes up to the FusionDirector of the data center management plane through the switching node.

FusionPoD 700 rack-scale servers support power capping. After the power capping function is enabled, when the real-time power of the cabinet reaches the preset power capping threshold, the iRM management system will control the running frequency of the CPU through the server node to try to ensure that the power of the cabinet does not exceed the power capping value, so as to ensure the continuous operation of the service. However, the performance of the server node may be decreased.

Switching Node Management System

Switching nodes provide management ports for other management systems to be aggregated to the uplink management switch and connected to the data center management system.

2.5 Networking Solution

FusionPoD 700 cabinet is configured with 36 DH141C V5, with each supporting two server mainboards. The cabinet networking solution is shown in Figure 2-7.

Figure 2-7 FusionPoD 700 cabinet networking solution

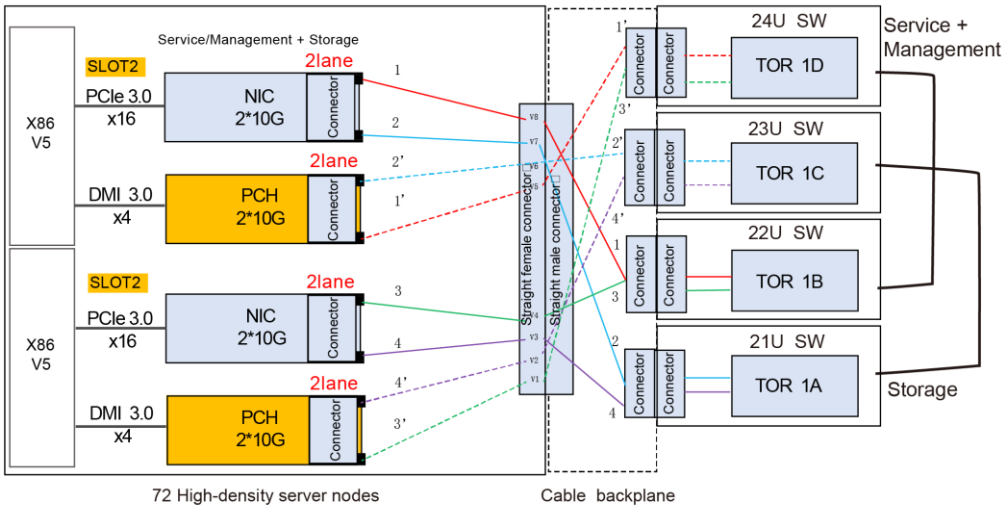

- The backplane provides cable connections to support high-speed signal only, supporting SERDES at 25GE PAM4 rates.
- The four slots from 21 U to 24 U are for switching, with each slot configured with nine 4 x 8-pair straight male connectors.
- Balanced switch connector configurations ensure shorter backplane connections.
- The server has 36 slots from 1 U to 20 U and 25 U to 40 U, and each slot is configured with one 4 x 8-pair connector.
- Each server node connector supports a maximum of 16 lanes, with each interactive slot supporting 4 lanes.

3 Hardware Description

3.1 Cabinet
3.2 Management Module
3.3 Server Node
3.4 Switching Node
3.5 Network Interface Card (NIC)
3.6 Power Supply
3.7 Leakage Detection Modules

3.1 Cabinet

External Structure

Figure 3-1 External structure

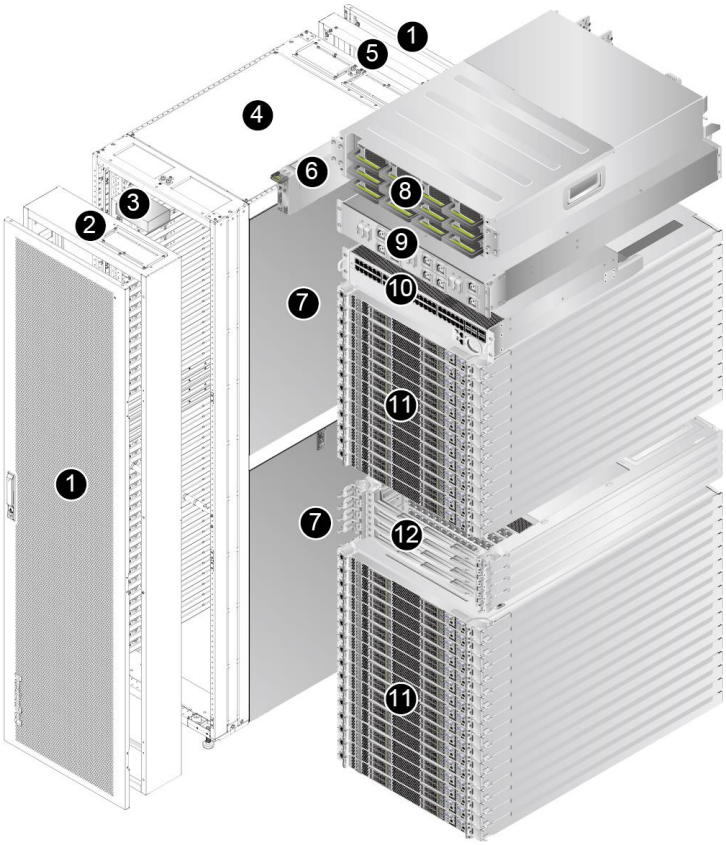

1	Cabinet door	2	Cable chassis
3	Temperature and humidity sensor	4	Liquid cooling cabinet
5	Rear shelf	6	Management module
7	Cabinet side panel	8	Power shelf
9	PDU	10	Out-of-band management switching node
11	Server node	12	Service switching node

3.2 Management Module

3.2.1 RM210

RM210 is the management module of FusionPoD 700. It provides cabinet management functions, including management of asset, power supply module, temperature and humidity monitoring, power consumption, liquid leakage detection, and liquid leakage detection on the secondary loop.

The RM210 is installed in the power chassis of FusionPoD 700 and shares the power chassis with PSUs.

For details, see *FusionPoD RM210 Management Module User Guide*.

Figure 3-2 Appearance of the RM210

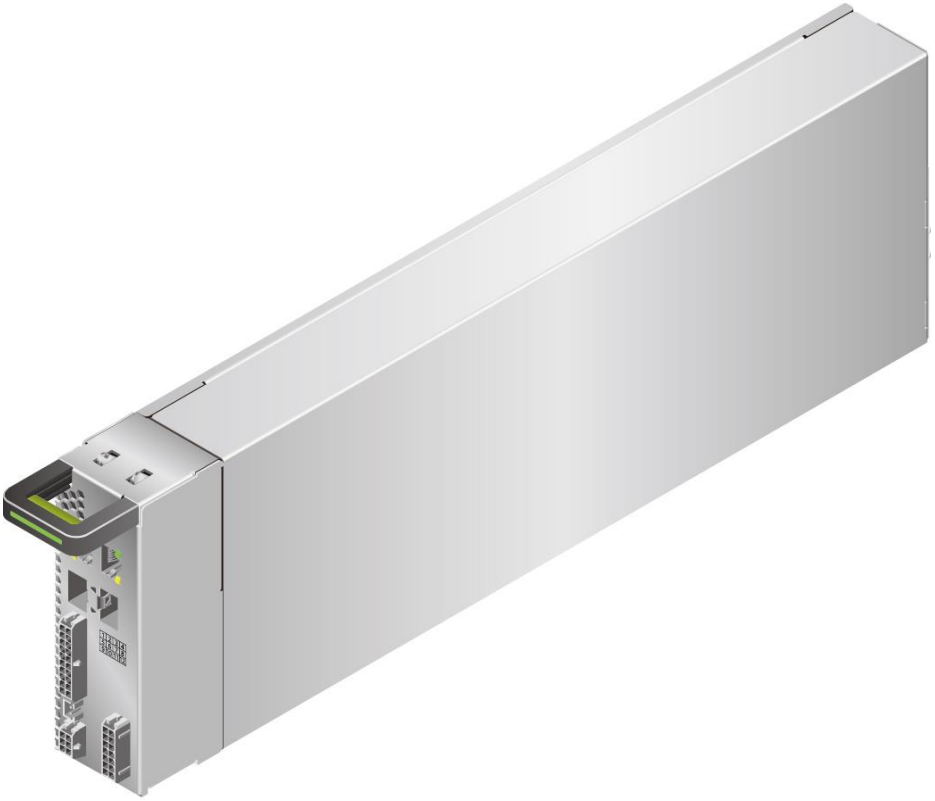

Figure 3-3 Front view of the RM210

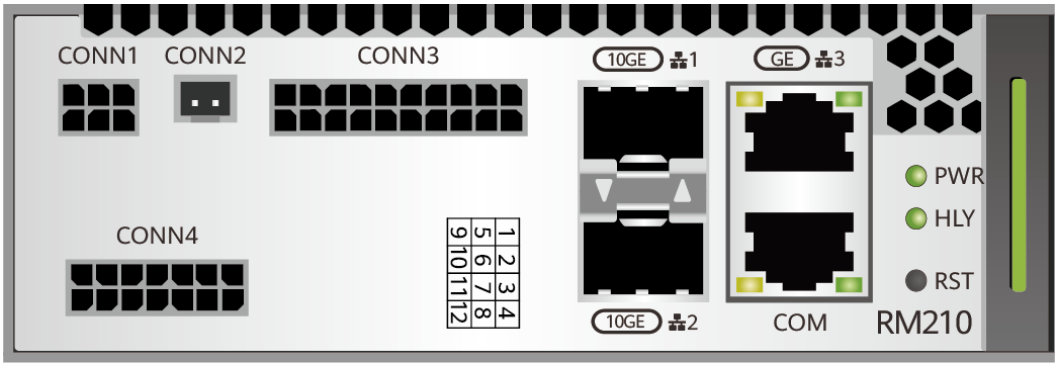

3.3 Server Node

3.3.1 DH141C V5

DH141C V5 server (DH141C V5) is a server with two computing nodes in a 1 U slot, which is the first-generation server node that supports the FusionPoD 700 rack-scale servers. The DH141C V5 is a 1 U liquid-cooled server node with large memory capacity that adopts 2nd Gen Intel® Xeon® Scalable processors (Cascade Lake).

For details, see *DH141C V5 Server Node User Guide*.

Figure 3-4 DH141C V5

3.4 Switching Node

3.4.1 Out-of Band Management Switching Node

The FusionPoD 700 supports out-of-band management switching nodes consisting of general-purpose switches and auxiliary fabric components. Currently, CE5855-48T4S2Q-EI is used, which provides the out-of-band management TOR switching function for the FusionPoD 700 rack-scale servers and centrally provides external management interfaces.

CE5855-48T4S2Q-EI switches are Huawei next-generation high-density GE switches designed for data centers and high-end campus networks. With advanced hardware structure, the switches provide the highest density GE ports, helping enterprises and operators to build a data center network platform for the cloud computing era.

Figure 3-5 Appearance of the out-of-band management switching node

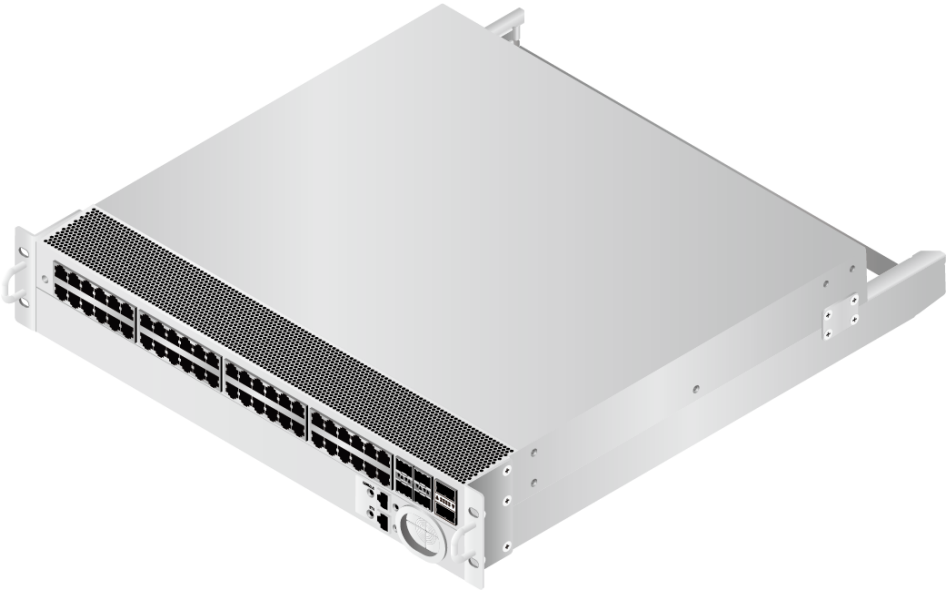

3.4.2 Service Switching Node

The FusionPoD 700 supports out-of-band management switching nodes consisting of general-purpose switches and auxiliary fabric components. Currently, CE5855-48T4S2Q-EI is used, which provides the out-of-band management TOR switching function for the FusionPoD 700 rack-scale servers and centrally provides external management interfaces.

CE8850-32CQ-EI switches are Huawei next-generation Ethernet switches designed for data centers and high-end campus networks, featuring high performance, high density, and low latency. With advanced hardware structure and high-density 25GE/100GE ports, the switches support various data center features and high-performance stacking.

Figure 3-6 Appearance of the service switching node

3.5 Network Interface Card (NIC)

3.5.1 Ethernet NICs

The Ethernet network interface cards (NICs) connect with the cable backplane through a high-speed signal connector to provide network expansion capabilities for server nodes.

Table 3-1 Ethernet NICs supported by FusionPoD 700 server nodes

NIC Model	Chip Model	Network Port Type	Network Port Quantity	API Type	NC-SI/WOL/PXE
SP330	Intel X710	10GE-KR	2	SFP+	√
X722	Intel X722	10GE-KR	2	SFP+	√
Note: "√" indicates that NC-SI/WOL/PXE is supported. "×" indicates that NC-SI/WOL/PXE is not supported.					

3.6 Power Supply

3.6.1 Power Shelf

The power shelf consists of the power chassis, power supply units (PSUs), and management module. The power shelf converts the AC power into stable DC power for the cabinet through the AC/DC module.

The power shelf supports a maximum of four three-phase 32 A inputs, as shown in Figure 3-7.

Figure 3-7 Structure

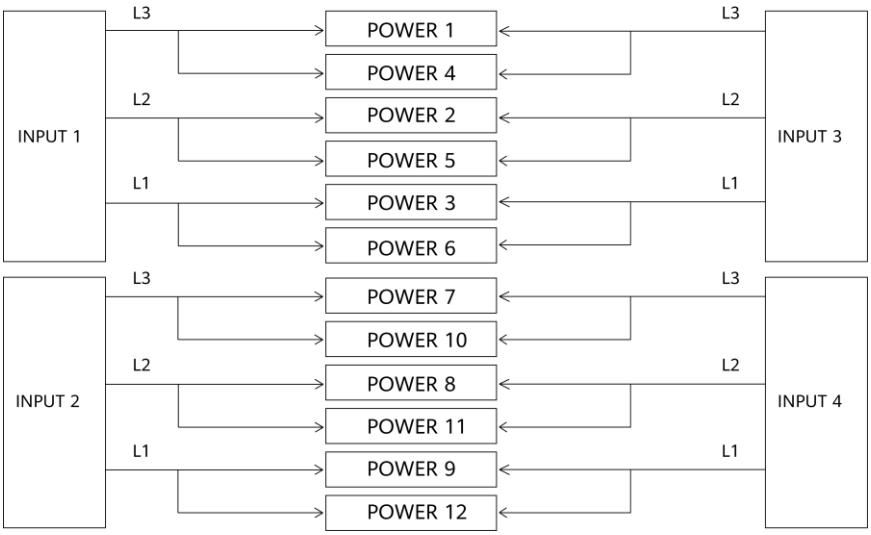

Appearance

Figure 3-8 Power shelf appearance

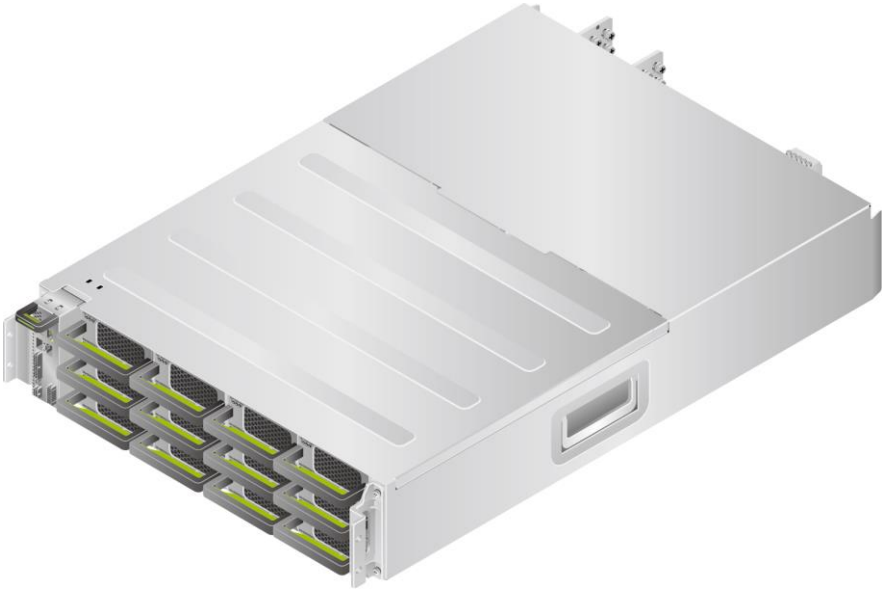

Figure 3-9 Front panel of the power shelf

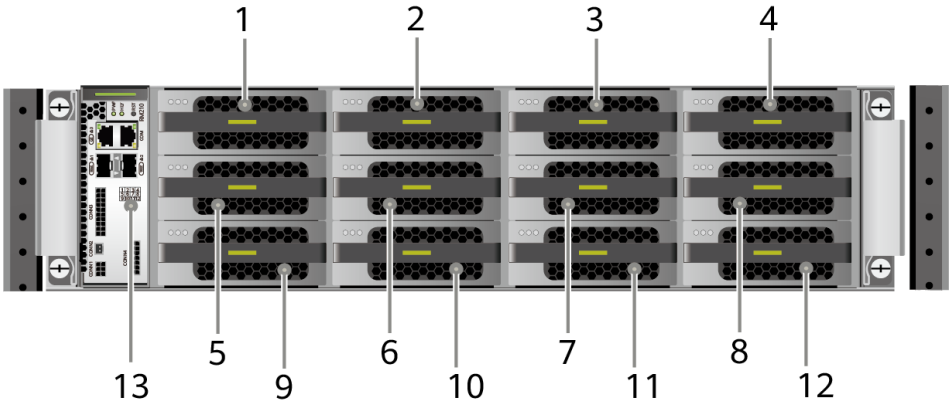

1	PSU 1	2	PSU 2
3	PSU 3	4	PSU 4
5	PSU 5	6	PSU 6
7	PSU 7	8	PSU 8
9	PSU 9	10	PSU 10
11	PSU 11	12	PSU 12
13	PSU slot ID	-	-

NOTE

PSU 1, 4, 7, and 10 work in phase L3; PSU 2, 5, 8, and 11 work in phase L2; PSU 3, 6, 9, and 12 work in phase L1. The same number of PSUs must be configured for each phase to ensure the balance among phases.

Technical Specifications

Table 3-2 Technical specifications

Item	Description
Model	FP500-PSM-36K-D1
Number of PSUs	12 in full configuration
Input voltage system	3L+N+PE
Input port	4: INPUT 1/INPUT 2 is the active power input, and INPUT 3/INPUT 4 is the standby power input.
Input voltage	Rated voltage of the 380 V power grid: 200 to 240 V AC (single-phase)/346 to 415 V AC (three-phase)
Input current	32 A/phase, 16 A/module
Output voltage	54.5 V DC
Output current	PSM: 660 A MAX, 55 A/module
Output power	Total power of a PSM: • 346 V AC to 415 V AC (three-phase): – 36 kW MAX (non-redundant) – 33 kW MAX (N+1 redundancy)
Dimensions (H x W x D)	133 mm × 536 mm × 750 mm

NOTE

The AC power supply system can be a 200 V to 240 V system or a 110 V system, but the three-phase AC power supply system must be 3L+N+PE.

3.6.2 PSU

The power supply unit (PSU) is connected from the outside through the AC INPUT port, and the output is collected on the copper bars of the power shelf.

Appearance

Figure 3-10 PSU appearance

Figure 3-11 PSU front panel

Table 3-3 Indicator description

Indicator	Description
Input (power indicator)	• Steady green: The PSU is powered on. • Blinking green at 0.5 Hz: the two-circuit input voltage is out of the range.

Indicator	Description
	• Blinking green at 4 Hz: the address signal parity check fails.
Output (power indicator)	• Steady green: The PSU is powered on. • Blinking green at 4 Hz: the address signal parity check fails. • Green light off: the two-circuit output voltage is below the range.
Alarm (alarm indicator)	• Red light off: The PSU is powered on. • Blinking red at 4 Hz: the address signal parity check fails. • Steady red: a PSU fault alarm is generated. For details, see *FusionPoD Cabinet Server Alarm Handling*.

Technical Specifications

Table 3-4 Technical specifications

Item	Description
Model	PAH3000S54-C
Dimensions (H x W x D)	40.8 mm × 104.8 mm × 485 mm
Weight	3.5 kg
Rated input voltage	110 V AC/230 V AC/277 V AC
Rated output voltage	54.5 V DC
Input voltage range	90 V AC to 294 V AC
Maximum input current	16 A
Maximum output power	• 1500 W (90 V AC to 176 V AC) • 3000 W (176 V AC to 294 V AC)
Output efficiency	• ≥ 96.5%@30% to 80% load (up to 97%, test condition Vin = 230 V AC), 230 V AC input • ≥ 95.5%@80% to 100% load, 230 V AC input • ≥ 95%@20% to 30% load, 230 V AC input • ≥ 92%@10% to 20% load, 230 V AC input

3.6.3 PDU

FusionPoD 700 cabinets configured with PDUs to power switching nodes for general switch scenarios. The PDU is installed under the power shelf. It provides 380 V AC (1+1) input and output for the power shelf, and 220 V AC (5+5) for the switching nodes to meet the power supply demand of 5 switching nodes in the cabinet.

Figure 3-12 PDU power supply architecture

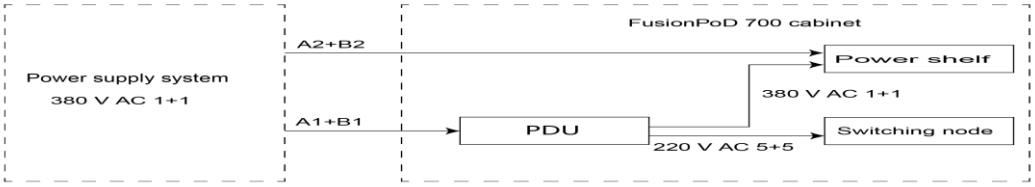

Appearance

Figure 3-13 PDU appearance

Figure 3-14 PDU front panel

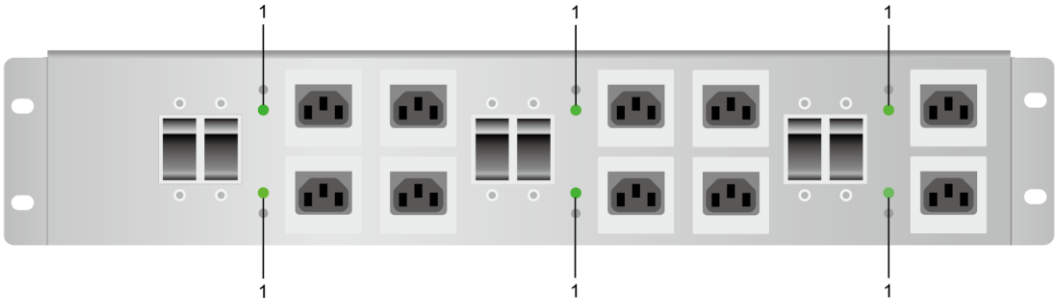

Figure 3-15 PDU rear panel

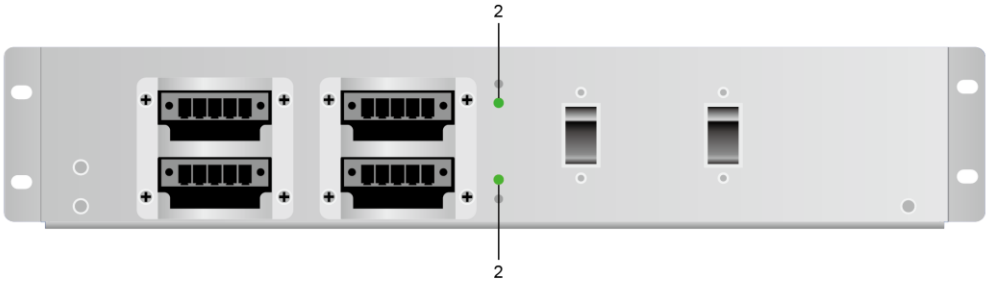

Table 3-5 Indicator description

No.	Indicator Description
1	Single-phase output indicator (green, 36-206 cd/m²), green is always on for normal status, and red is always on for abnormal status.
2	Three-phase output indicator (green, 36-206 cd/m²), green is always on for normal status, and red is always on for abnormal status.

Technical Specifications

Table 3-6 Technical specifications

Item	Description
Input voltage mode	3L+N+PE
Input port	Phoenix terminal
Input voltage	380 V AC, two three-phase, five-wire
Input current	A maximum of 32 A/phase

Item	Description
Output voltage	380 V AC (1+1) and 220 V AC (5+5)
Output current	• Single-phase output: a maximum of 5 A for each power supply • Three-phase output: a maximum of 27 A for each power supply
Dimensions (H x W x D)	86.1 mm × 442 mm × 750 mm

3.7 Leakage Detection Modules

3.7.1 Photoelectric Leakage Sensor

The photoelectric leakage sensor is used to detect whether there is a leak in the Manifold and report a leak detection alarm through the RM210 management module.

Figure 3-16 Position of the photoelectric leakage sensor

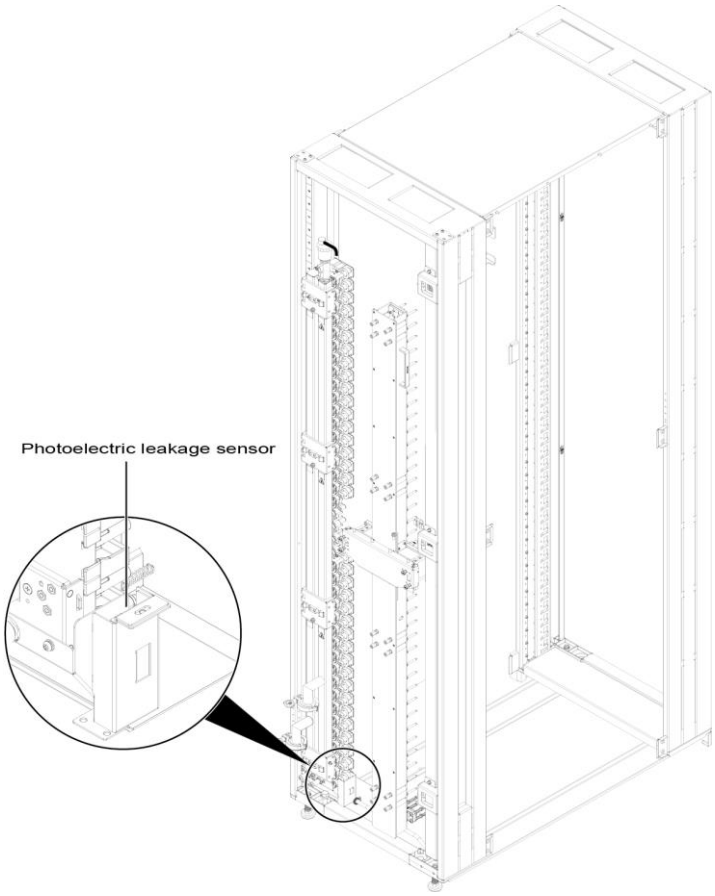

3.7.2 Liquid Leakage Detection on the Secondary Loop

The liquid leakage detection on the secondary loop consists of a leakage sensor and a water sensor. The water sensor is fixed at the bottom of the secondary loop of the equipment room. When liquid leakage occurs in the secondary loop, an alarm is reported to the cabinet management module through the photoelectric leakage sensor to realize liquid leakage monitoring.

Figure 3-17 Water sensor signal cable

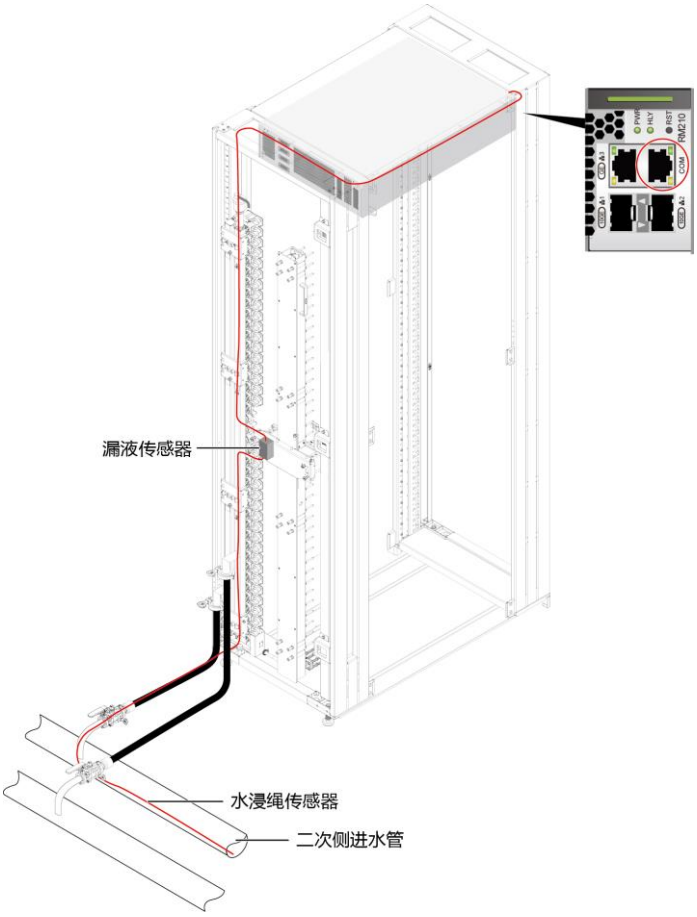

4 Specifications

4.1 Technical Specifications
4.2 Environmental Specifications
4.3 Physical Specifications

4.1 Technical Specifications

Table 4-1 Technical specifications

Item	Description
Available space	47 U.
Heat dissipation mode	Board-level liquid cooling.
Power consumption	Power consumption of the entire cabinet (fully equipped with DH141C V5): 33 kW, and single node power consumption: 1.2 kW.
Cabinet management module	Two 10GE ports, one GE port, and one RS485 serial port.
Server node	Thirty-six 1 U server nodes. **NOTE** • The number of configurable server nodes depends on the actual power consumption. The same cabinet only supports server node configurations of the same model. • For details of supported server nodes, see 3.3 Server Node. • The cabinet comes with guide rails, and the server nodes are installed directly on the guide rails. The DH141C V5 supports two server mainboards, and each mainboard supports: • Two Intel® Xeon® Scalable processors. • A maximum of 16 DDR4 DIMMs. • RAID 0 and 1 • One dual-port 10GE and 25GE network adapters.

Item	Description
	• Two 10GE LOM network ports.
Switching node	Four service switching nodes and one out-of-band management switching node.
Cabinet door	Front and rear perforated doors.
PSU	• 12 PSUs (3 kW/PSU). • Three-phase AC power supply (2+2), and the input voltage range is 346 V AC to 415 V AC. • Four IEC 60309 AC male connectors.

4.2 Environmental Specifications

Table 4-2 Environmental specifications

Item	Description
Temperature	• Operating temperature: 5ºC to 45ºC (41ºF to 113ºF) (ASHRAE Classes A1 to A3 compliant) • Storage temperature (within three months): -30ºC to +60ºC (-22ºF to +140ºF) • Storage temperature (within six months): -15ºC to +45ºC (5ºF to 113ºF) • Storage temperature (within one year): -10ºC to +35ºC (14ºF to 95ºF) • Maximum temperature change rate: 20ºC (36ºF) per hour, 5ºC (9ºF) per 15 minutes
Relative humidity (RH, non-condensing)	• Operating humidity: 8% to 90% **NOTICE** No condensation is allowed on liquid cooling components. • Storage humidity (within three months): 8% to 85% • Storage humidity (within six months): 8% to 80% • Storage humidity (within one year): 20% to 75% • Maximum change rate: 20%/h
Altitude	≤ 3050 m • When the configuration complies with ASHRAE Class A1 and A2, and the operating altitude is above 900 m (2952.76 ft), the operating temperature decreases by 1ºC (1.8ºF) for every increase of 300 m (984.25 ft). • When the configuration complies with ASHRAE Class A3, and the operating altitude is above 900 m (2952.76 ft), the operating temperature decreases by 1ºC (1.8ºF) for every increase of 175 m (574.14 ft).

Item	Description
Water inlet temperature	5ºC(41ºF) to 45ºC (113ºF), the actual inlet water temperature is 3ºC (37.4ºF) above the dew point temperature of the equipment room.
Water inlet flow rate	Single DH110C V5: ≥ 0.8 L/min, and the entire cabinet: ≥ 32 L/min
Pressure drop	45 kPa
Corrosive airborne contaminants	Maximum corrosion product thickness growth rate: • Copper corrosion rate test: 300 Å/month (meeting level G1 requirements of the ANSI/ISA-71.04-2013 standard on gaseous corrosion • Silver corrosion rate test: 200 Å/month
Particle contaminants	• Meets the requirements of ISO 14664-1 Class 8 • There is no explosive, conductive, magnetic, or corrosive dust in the equipment room **NOTE** It is recommended that the particulate pollution in the equipment room be monitored by a professional agency.
Acoustic noise	The declared A-weighted sound power levels (LWAd) and declared average bystander position A-weighted sound pressure levels (LpAm) listed are measured at 23ºC (73.4ºF) in accordance with ISO 7779 (ECMA 74) and declared in accordance with ISO 9296 (ECMA 109). • Idle: – LWAd: 6.26 Bels – LpAm: 62.6 dBA • Running: – LWAd: 6.28 Bels – LpAm: 62.8 dBA **NOTE** Actual sound levels generated during operation vary depending on the configuration, load, and ambient temperature.

4.3 Physical Specifications

Table 4-3 Physical specifications

Item	Description
700 Cabinet dimensions (H x W x D)	• 2200 mm x 600 mm x 1350 mm (without casters) • 2250 mm x 600 mm x 1350 mm (with casters)

Item	Description
720 Cabinet dimensions (H x W x D)	• 2200mm×600mm×1200mm (without casters or RDHx) • 2200mm×600mm×1250mm (without casters but with RDHx) • 2250mm×600mm×1200mm (with casters but without RDHx) • 2250mm×600mm×1250mm (with casters and RDHx)
Installation size requirements	• Cabinet projection area: 600 mm x 1350 mm • Floor height ≥ 600 mm • A minimum of 1.2 m clearance must be reserved in front of both the front and rear doors for maintenance.
Fully equipped weight	• Maximum weight of a fully configured DH141C V5: 1400 kg • Packing material weight: 34.8 kg (76.72 lb)
Energy consumption	The power consumption parameters vary with configurations (including the configurations complying with ErP).

5 Software and Hardware Compatibility

For details about the operating system and hardware, see the compatibility list.

NOTICE

Do not use incompatible components. Otherwise, the device may fail to work properly. The technical support and warranty do not cover faults caused by incompatible components.

6 Safety Instructions

6.1 Security

6.2 Maintenance and Warranty

6.1 Security

General Statement

- Comply with local laws and regulations when installing equipment. These safety instructions are only a supplement.
- The "DANGER", "WARNING", and "CAUTION" information in this document does not represent all the safety instructions, but supplements to the safety instructions.
- Observe all safety instructions provided on device labels.
- Operators of special types of work (such as electricians, operators of electric forklifts, and so on.) must be certified or authorized by the local government or authority.
- This product is a Class A device. Take protective measures before operating this product in a residential area as it is likely to cause radio interference.

Human Safety

- Only qualified personnel are allowed to perform special tasks, such as performing high-voltage operations and driving a forklift.
- Discontinue any dangerous operations and take protective measures. Report anything that could cause personal injury or equipment damage to a project supervisor.
- Do not move devices or install cabinets and power cables in hazardous weather conditions.
- For lifting or carrying hardware, ensure load limits and manpower provisions conform to legal specifications. Check the maximum equipment weight and arrange required personnel.
- Wear clean protective gloves, ESD clothing, a protective hat, and protective shoes, as shown in Figure 6-1.

Figure 6-1 Protective clothing

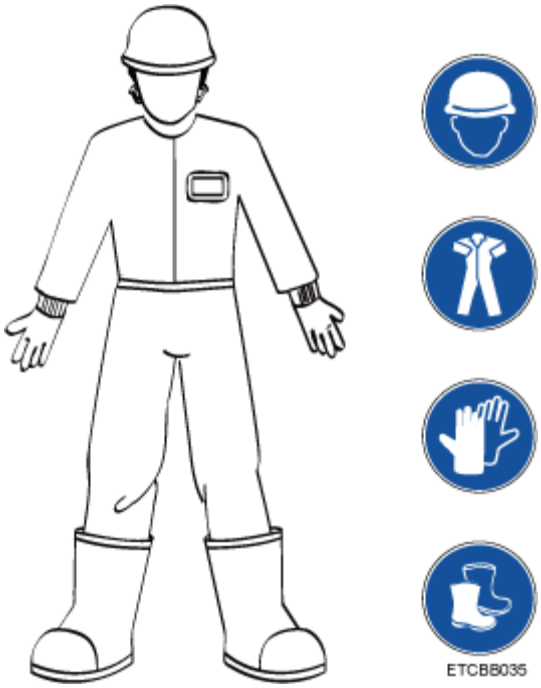

- Before touching a device, wear ESD clothing and gloves (or wrist strap), and remove any conductive objects (such as watches and jewelry). Figure 6-2 shows conductive objects that must be removed before you touch a device.

Figure 6-2 Removing conductive objects

Figure 6-3 shows how to wear an ESD wrist strap.

a. Secure the ESD wrist strap around your wrist.

b. Fasten the strap buckle and ensure that the ESD wrist strap is in contact with your skin.

c. Insert the ground terminal attached to the ESD wrist strap into the jack on the grounded cabinet or chassis.

Figure 6-3 Wearing an ESD wrist strap

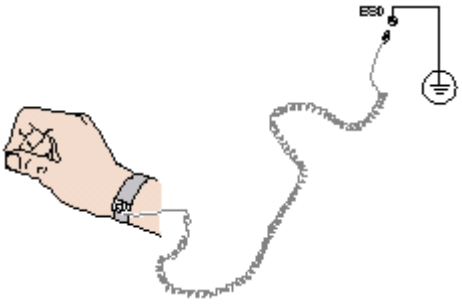

- Exercise caution when using tools.
- Use a stacker when lifting hardware above shoulder height.
- Avoid any contact with high-voltage cables.
- Properly ground a device before powering it on.
- Do not use the ladder unsupervised. Have someone else hold the ladder steady to prevent accidents.
- Do not look into optical ports without eye protection.

Equipment Safety

- Use the recommended power cables at all times.
- Power cables are used only for dedicated devices.
- Wear ESD clothing and gloves before touching any devices.
- When moving a device, hold the bottom of the device. Do not hold the handles of the installed modules, such as the PSUs, fan modules, drives, and the mainboard. Handle devices with care. Handle the equipment with care.
- Exercise caution when using tools.
- Ground devices before powering it on.

Transportation Precautions

Contact the manufacturer for precautions before attempting transportation.

Transportation precautions include but are not limited to:

- The logistics company engaged to transport the device must be reliable and comply with international standards for transporting electronics. Ensure that the equipment being transported is always kept upright. Take necessary precautions to prevent collisions, corrosion, package damage, damp conditions and pollution.
- Transport each device in its original packaging.
- If the original packaging is unavailable, package heavy, bulky parts (such as chassis and blades) and fragile parts (such as optical modules and PCIe cards: GPU or SSD) separately.
- Power off all devices before transportation.

Maximum Weight Carried by a Person

CAUTION

Comply with local regulations for the maximum load per person.

Table 6-1 lists the maximum weight one person is permitted to carry as stipulated by a number of organizations.

Table 6-1 Maximum weight carried per person

Organization	Weight (kg/lb)
CEN (European Committee for Standardization)	25/55.13
ISO (International Organization for Standardization)	25/55.13
NIOSH (National Institute for Occupational Safety and Health)	23/50.72
HSE (Health and Safety Executive)	25/55.13
General Administration of Quality Supervision, Inspection and Quarantine of the People's Republic of China (AQSIQ)	• Male: 15/33.08 • Female: 10/22.05

For more information about safety instructions, see *Server Safety Information*.

6.2 Maintenance and Warranty

For details about maintenance, see Service Exceptions and Limitations.

For details about warranty, see Warranty.

A Appendix

A.1 Liquid Working Medium Inspection Criteria

Table A-1 Liquid working medium inspection criteria

Item	Standard
Ethylene glycol concentration	25±5% (volume concentration) **NOTE** The material designation and supply channel must be confirmed by the vendor.
Appearance (initial water quality)	No visible impurities
pH value (20ºC or 68ºF)	≥ 6.5
Total microorganism count	≤ 10^5 CFU/mL

B Glossary

B.1 A-E

A

Active Optical Cable (AOC)	A communications cable that requires external energy to convert electrical signals into optical signals or convert optical signals into electrical signals. The optical transceivers at both ends of an optical cable provide functions of photoelectric conversion and optical transmission.

B

Baseboard Management Controller (BMC)	As the core of the Intelligent Platform Management Interface (IPMI) standards, the BMC is responsible for collecting, processing, and storing sensor signals, and monitoring the operating status of components of a server. The BMC also provides the hardware status and alarm information about the managed objects to the management module to implement central management.
busbar	A copper bar or aluminum bar that connects the general switch of the power distribution cabinet and each branch circuit switch in the power supply system. The main function is to serve as the conductor and its surface is insulated.

E

End of Row (EOR)	A method of distinguishing switches based on the cabling mode. EOR switches are deployed in one or two cabinets at the end of a row. All servers in the cabinets are connected to EOR switches using horizontal cabling.

B.2 F-M

M

Middle of Row (MOR)	A method of distinguishing switches based on the cabling mode. The connection mode of MOR switches is similar to that of EOR switches. Access switches are deployed in one or two cabinets in a cabinet group in a centralized manner. The only difference is that the network cabinet is located in the middle of the cabinet group.

B.3 N-T

S

Serializer/Deserializer (SerDes)	A pair of functional blocks commonly used in medium- and long-distance high-speed communications. SerDes is often selected as the physical layer implementation solution of communication protocols such as PCIe, gigabit Ethernet, and optical fiber communication, and is widely used for high-speed communications between chips, between cards, and between devices.

T

Top of Rack (TOR)	A method of distinguishing switches based on the cabling mode. ToR switches are deployed at the top of the cabinet. Servers in the cabinet are connected to the switches by using optical fibers or network cables, and the switches are connected to upper-layer aggregation switches.
Power Usage Effectiveness (PUE)	A comprehensive indicator that is widely accepted and used by data centers in and outside China to measure the energy efficiency of data center infrastructure.

C Acronyms and Abbreviations

C.1 A-G

B

BBU	Backup Battery Unit
BIOS	Basic Input Output System
BMC	Baseboard Management Controller

C

CAPEX	Capital Expenditure
CCU	Cabinet Control Unit
CDU	Coolant Distribute Unit
CI	Continuous Integration
CLI	Command-line Interface

D

DAC	Digital to Analog Converter
DC	Direct Current
DDR4	Double Data Rate 4
DIMM	Dual In-line Memory Module

E

EMC	Electro Magnetic Compatibility
ECC	Error Checking and Correcting

F

FB-DIMM	Fully Buffered DIMM
FC	Fiber Channel
FCC	Federal Communications Commission
FCoE	Fibre Channel Over Ethernet
FTP	File Transfer Protocol
FDM	Fault Diagnosis & Management

G

GE	Gigabit Ethernet
ECC	Error Checking and Correcting

C.2 H-N

H

HPC	High Performance Computing
HTTP	Hypertext Transfer Protocol
HTTPS	Hypertext Transfer Protocol Secure

I

iBMC	Intelligent Baseboard Management Controller
iRM	Intelligent Rack Management
IDC	Internet Data Center
IP	Internet Protocol
IEC	International Electrotechnical Commission

IEEE	Institute of Electrical and Electronics Engineers
IP	Internet Protocol
IPMI	Intelligent Platform Management Interface

M

MAC	Media Access Control

N

NC-SI	Network Controller Sideband Interface

C.3 O-S

O

OCP	Open Compute Project
ODCC	Open Data Center Committee
OpEx	Operating Expense

P

PCIe	Peripheral Component Interconnect Express
PUE	Power Usage Effectiveness (PUE)
PWM	Pulse-width Modulation

R

RAS	Reliability, Availability and Serviceability
RDHx	Rear Door Heat Exchanger
RDIMM	Registered Dual In-line Memory Module
RJ45	Registered Jack 45
RoHS	Restriction of the Use of Certain Hazardous Substances in Electrical and Electronic Equipment

S

SAS	Serial Attached Small Computer System Interface
SATA	Serial Advanced Technology Attachment
SCM	Supply Chain Management
SDV	System Design Verification
SIT	System Integration Test
SOC	State of Charge
SMTP	Simple Mail Transfer Protocol
SNMP	Simple Network Management Protocol
SOL	Serial Over LAN
SONCAP	Standards Organization of Nigeria-Conformity Assessment Program
SSD	Solid-State Drive
SSE	Streaming SIMD Extension

C.4 T-X

T

TCO	Total Cost of Ownership

U

UPS	Uninterruptible Power Supply